Tazewell County Highway Department

AUTHORIZATION TO BID FORM

Addenda will be published to our Bid Letting page in the same manner as the plans and specifications. It is the sole responsibility of the plan holders to periodically check the website for plan addenda.

ALL BIDDERS PLANNING TO PLACE A BID MUST FILL OUT THIS FORM TO BE AUTHORIZED TO BID.

- This form must be completed, signed and either faxed to (309) 925-5533 or emailed to jsciortino@tazewell.com.
- Failure to submit this completed form will result in the bid not being accepted.
- If an email address is provided a Notice of Addenda will be sent when updates are available.
- Bid results are typically posted by noon the day after the County Board meeting (last Wednesday of each month) when bids are approved.

Company Name:	
Address:	
Phone:	
Fax:	
Email:	
Bid Letting Date:	

Projects Intending to Bid on:

Section Number:	Description:

Tazewell County Highway Department
21308 Illinois Route 9
Tremont, IL 61568
p: (309) 925-5532 • f: (309) 925-5533 • jsciortino@tazewell.com

RETURN WITH BID

Illinois Department of Transportation

Local Public Agency Formal Contract Proposal

PROPOSAL SUBMITTED BY		
Contractor's Name		
Street		P.O. Box
City	State	Zip Code

STATE OF ILLINOIS

COUNTY OF TAZEWELL

GROVELAND ROAD DISTRICT

(Name of City, Village, Town or Road District)

FOR THE IMPROVEMENT OF

STREET NAME OR ROUTE NO. TR 25B TERMINAL AVENUE

SECTION NO. 16-08000-02-GM (NON-MFT)

TYPES OF FUNDS TOWNSHIP NON-MFT FUNDS

☒ SPECIFICATIONS (required) ☐ PLANS (required)

For Municipal Projects

Submitted/Approved/Passed

☐ Mayor ☐ President of Board of Trustees ☐ Municipal Official

Date

Department of Transportation

☐ Released for bid based on limited review

Regional Engineer

Date

For County and Road District Projects

Submitted/Approved

James W McCool

Highway Commissioner

4-29-16

Date

Submitted/Approved

Craig Tuck P.E.

County Engineer/Superintendent of Highways

2 May 2016

Date

Note: All proposal documents, including Proposal Guaranty Checks or Proposal Bid Bonds, should be stapled together to prevent loss when bids are processed.

RETURN WITH BID

NOTICE TO BIDDERS

County TAZEWELL
Local Public Agency GROVELAND R.D.
Section Number 16-08000-02-GM (N-MFT)
Route TR 25 TERMINAL AVE.

Sealed proposals for the improvement described below will be received at the office of TAZEWELL COUNTY ENGINEER, 21308 ILLINOIS ROUTE 9 TREMONT, ILLINOIS 61568 (Address) until 8:00 AM (Time) on May 16, 2016 (Date)

Sealed proposals will be opened and read publicly at the office of TAZEWELL COUNTY ENGINEER 21308 ILLINOIS ROUTE 9 TREMONT, ILLINOIS 61568 (Address) at 8:00 AM (Time) on May 16, 2016 (Date)

DESCRIPTION OF WORK

Name 16-08000-02-GM (N-MFT) Length: 1750.00 feet (0.33 miles)
Location TR 25 TERMINAL AVE.
Proposed Improvement BITUMINOUS SURFACE TREATMENT, CLASS A-3 AND RELATED WORK.

1. Plans and proposal forms will be available in the office of TAZEWELL COUNTY ENGINEER 21308 ILLINOIS ROUTE 9 TREMONT, ILLINOIS 61568 (Address)

2. ☒ Prequalification
   If checked, the 2 low bidders must file within 24 hours after the letting an "Affidavit of Availability" (Form BC 57), in duplicate, showing all uncompleted contracts awarded to them and all low bids pending award for Federal, State, County, Municipal and private work. One original shall be filed with the Awarding Authority and one original with the IDOT District Office.

3. The Awarding Authority reserves the right to waive technicalities and to reject any or all proposals as provided in BLRS Special Provision for Bidding Requirements and Conditions for Contract Proposals.

4. The following BLR Forms shall be returned by the bidder to the Awarding Authority:
   a. BLR 12200: Local Public Agency Formal Contract Proposal
   b. BLR 12200a Schedule of Prices
   c. BLR 12230: Proposal Bid Bond (if applicable)
   d. BLR 12325: Apprenticeship or Training Program Certification (**do not use for federally funded projects**)
   e. BLR 12326: Affidavit of Illinois Business Office

5. The quantities appearing in the bid schedule are approximate and are prepared for the comparison of bids. Payment to the Contractor will be made only for the actual quantities of work performed and accepted or materials furnished according to the contract. The scheduled quantities of work to be done and materials to be furnished may be increased, decreased or omitted as hereinafter provided.

6. Submission of a bid shall be conclusive assurance and warranty the bidder has examined the plans and understands all requirements for the performance of work. The bidder will be responsible for all errors in the proposal resulting from failure or neglect to conduct an in depth examination. The Awarding Authority will, in no case be responsible for any costs, expenses, losses or changes in anticipated profits resulting from such failure or neglect of the bidder.

7. The bidder shall take no advantage of any error or omission in the proposal and advertised contract.

8. If a special envelope is supplied by the Awarding Authority, each proposal should be submitted in that envelope furnished by the Awarding Agency and the blank spaces on the envelope shall be filled in correctly to clearly indicate its contents. When an envelope other than the special one furnished by the Awarding Authority is used, it shall be marked to clearly indicate its contents. When sent by mail, the sealed proposal shall be addressed to the Awarding Authority at the address and in care of the official in whose office the bids are to be received. All proposals shall be filed prior to the time and at the place specified in the Notice to Bidders. Proposals received after the time specified will be returned to the bidder unopened.

9. Permission will be given to a bidder to withdraw a proposal if the bidder makes the request in writing or in person before the time for opening proposals.

RETURN WITH BID

PROPOSAL

County TAZEWELL
Local Public Agency GROVELAND R.D.
Section Number 16-08000-02-GM (N-MFT)
Route TR 25 TERMINAL AVE.

1. Proposal of _____

for the improvement of the above section by the construction of _____
BITUMINOUS SURFACE TREATMENT, CLASS A-3 AND RELATED WORK.

a total distance of 1750.00 feet, of which a distance of 0.33 feet, (0.331 miles) are to be improved.

2. The plans for the proposed work are those prepared by TAZEWELL COUNTY HIGHWAY DEPARTMENT and approved by the Department of Transportation on _____

3. The specifications referred to herein are those prepared by the Department of Transportation and designated as "Standard Specifications for Road and Bridge Construction" and the "Supplemental Specifications and Recurring Special Provisions" thereto, adopted and in effect on the date of invitation for bids.

4. The undersigned agrees to accept, as part of the contract, the applicable Special Provisions indicated on the "Check Sheet for Recurring Special Provisions" contained in this proposal.

5. The undersigned agrees to complete the work within N/A working days or by 08/15/2016 unless additional time is granted in accordance with the specifications.

6. A proposal guaranty in the proper amount, as specified in BLRS Special Provision for Bidding Requirements and Conditions for Contract Proposals, will be required. Bid Bonds will be allowed as a proposal guaranty. Accompanying this proposal is either a bid bond if allowed, on Department form BLR 12230 or a proposal guaranty check, complying with the specifications, made payable to:

Groveland Township Supervisor, Dan McCormick _____

The amount of the check is _____ (_____).

7. In the event that one proposal guaranty check is intended to cover two or more proposals, the amount must be equal to the sum of the proposal guaranties, which would be required for each individual proposal. If the proposal guaranty check is placed in another proposal, it will be found in the proposal for: Section Number _____.

8. The successful bidder at the time of execution of the contract will be required to deposit a contract bond for the full amount of the award. When a contract bond is not required, the proposal guaranty check will be held in lieu thereof. If this proposal is accepted and the undersigned fails to execute a contract and contract bond as required, it is hereby agreed that the Bid Bond or check shall be forfeited to the Awarding Authority.

9. Each pay item should have a unit price and a total price. If no total price is shown or if there is a discrepancy between the product of the unit price multiplied by the quantity, the unit price shall govern. If a unit price is omitted, the total price will be divided by the quantity in order to establish a unit price.

10. A bid will be declared unacceptable if neither a unit price nor a total price is shown.

11. The undersigned submits herewith the schedule of prices on BLR 12200a covering the work to be performed under this contract.

12. The undersigned further agrees that if awarded the contract for the sections contained in the combinations on BLR 12200a, the work shall be in accordance with the requirements of each individual proposal for the multiple bid specified in the Schedule for Multiple Bids below.

RETURN WITH BID

Illinois Department of Transportation

SCHEDULE OF PRICES

County TAZEWELL
Local Public Agency GROVELAND R.D.
Section 16-08000-02-GM (N-MFT)
Route TR 25 TERMINAL AVE.

Schedule for Multiple Bids

Combination Letter	Sections Included in Combinations	Total

Schedule for Single Bid

(For complete information covering these items, see plans and specifications)

Bidder's Proposal for making Entire Improvements

Item No.	Items	Unit	Quantity	Unit Price	Total
1	PREPARATION OF BASE	SQ YD	4,399		
2	BIT MATLS PR CT (MC-30)	GALLON	1,320		
3	BIT MATLS C&S CT (PG52-28)	GALLON	4,079		
4	COVER COAT AGG (CA-14)	TON	109		
5	SEAL COAT AGG (CA-16)	TON	50		
6	TRAF CONT-PROT SPL	L SUM	1		

County	TAZEWELL
Local Public Agency	GROVELAND R.D.
Section Number	16-08000-02-GM (N-MFT)
Route	TR 25 TERMINAL AVE.

CONTRACTOR CERTIFICATIONS

The certifications hereinafter made by the bidder are each a material representation of fact upon which reliance is placed should the Department enter into the contract with the bidder.

1. **Debt Deliquency.** The bidder or contractor or subcontractor, respectively, certifies that it is not delinquent in the payment of any tax administered by the Department of Revenue unless the individual or other entity is contesting, in accordance with the procedures established by the appropriate revenue Act, its liability for the tax or the amount of tax. Making a false statement voids the contract and allows the Department to recover all amounts paid to the individual or entity under the contract in a civil action.

2. **Bid-Rigging or Bid Rotating.** The bidder or contractor or subcontractor, respectively, certifies that it is not barred from contracting with the Department by reason of a violation of either 720 ILCS 5/33E-3 or 720 ILCS 5/33E-4.

   A violation of Section 33E-3 would be represented by a conviction of the crime of bid-rigging which, in addition to Class 3 felony sentencing, provides that any person convicted of this offense or any similar offense of any state or the United States which contains the same elements as this offense shall be barred for 5 years from the date of conviction from contracting with any unit of State or local government. No corporation shall be barred from contracting with any unit of State or local government as a result of a conviction under this Section of any employee or agent of such corporation if the employee so convicted is no longer employed by the corporation and: (1) it has been finally adjudicated not guilty or (2) if it demonstrates to the governmental entity with which it seeks to contract and that entity finds that the commission of the offense was neither authorized, requested, commanded, nor performed by a director, officer or a high managerial agent in behalf of the corporation.

   A violation of Section 33E-4 would be represented by a conviction of the crime of bid-rotating which, in addition to Class 2 felony sentencing, provides that any person convicted of this offense or any similar offense of any state or the United States which contains the same elements as this offense shall be permanently barred from contracting with any unit of State or local government. No corporation shall be barred from contracting with any unit of State or local government as a result of a conviction under this Section of any employee or agent of such corporation if the employee so convicted is no longer employed by the corporation and: (1) it has been finally adjudicated not guilty or (2) if it demonstrates to the governmental entity with which it seeks to contract and that entity finds that the commission of the offense was neither authorized, requested, commanded, nor performed by a director, officer or a high managerial agent in behalf of the corporation.

3. **Bribery.** The bidder or contractor or subcontractor, respectively, certifies that it has not been convicted of bribery or attempting to bribe an officer or employee of the State of Illinois or any unit of local government, nor has the firm made an admission of guilt of such conduct which is a matter of record, nor has an official, agent, or employee of the firm committed bribery or attempted bribery on behalf of the firm and pursuant to the direction or authorization of a responsible official of the firm.

4. **Interim Suspension or Suspension.** The bidder or contractor or subcontractor, respectively, certifies that it is not currently under a suspension as defined in Subpart I of Title 44 Subtitle A Chapter III Part 6 of the Illinois Administrative Code. Furthermore, if suspended prior to completion of this work, the contract or contracts executed for the completion of this work may be cancelled.

County TAZEWELL
Local Public Agency GROVELAND R.D.
Section Number 16-08000-02-GM (N-MFT)
Route TR 25 TERMINAL AVE.

SIGNATURES

(If an individual)

Signature of Bidder _____

Business Address _____

(If a partnership)

Firm Name _____

Signed By _____

Business Address _____

Inset Names and Addressed of All Partners _____

(If a corporation)

Corporate Name _____

Signed By _____
President

Business Address _____

Insert Names of Officers

President _____

Secretary _____

Treasurer _____

Attest: _____
Secretary

Illinois Department of Transportation

Local Agency Proposal Bid Bond

Route TR 25 TERMINAL AVE.
County TAZEWELL
Local Agency GROVELAND R.D.
Section 16-08000-02-GM (N-MFT)

RETURN WITH BID

PAPER BID BOND

WE _____ as PRINCIPAL,

and _____ as SURETY,

are held jointly, severally and firmly bound unto the above Local Agency (hereafter referred to as "LA") in the penal sum of 5% of the total bid price, or for the amount specified in the proposal documents in effect on the date of invitation for bids whichever is the lesser sum. We bind ourselves, our heirs, executors, administrators, successors, and assigns, jointly pay to the LA this sum under the conditions of this instrument.

WHEREAS THE CONDITION OF THE FOREGOING OBLIGATION IS SUCH that, the said PRINCIPAL is submitting a written proposal to the LA acting through its awarding authority for the construction of the work designated as the above section.

THEREFORE if the proposal is accepted and a contract awarded to the PRINCIPAL by the LA for the above designated section and the PRINCIPAL shall within fifteen (15) days after award enter into a formal contract, furnish surety guaranteeing the faithful performance of the work, and furnish evidence of the required insurance coverage, all as provided in the "Standard Specifications for Road and Bridge Construction" and applicable Supplemental Specifications, then this obligation shall become void; otherwise it shall remain in full force and effect.

IN THE EVENT the LA determines the PRINCIPAL has failed to enter into a formal contract in compliance with any requirements set forth in the preceding paragraph, then the LA acting through its awarding authority shall immediately be entitled to recover the full penal sum set out above, together with all court costs, all attorney fees, and any other expense of recovery.

IN TESTIMONY WHEREOF, the said PRINCIPAL and the said SURETY have caused this instrument to be signed by their respective officers this _____ day of _____

Principal

_____ (Company Name) _____ (Company Name)

By: _____ (Signature and Title) By: _____ (Signature and Title)

(If PRINCIPLE is a joint venture of two or more contractors, the company names, and authorized signatures of each contractor must be affixed.)

Surety

_____ (Name of Surety) By: _____ (Signature of Attorney-in-Fact)

STATE OF ILLINOIS,
COUNTY OF _____

I. _____, a Notary Public in and for said county,
do hereby certify that _____
(Insert names of individuals signing on behalf of PRINCIPAL & SURETY)

who are each personally known to me to be the same persons whose names are subscribed to the foregoing instrument on behalf of PRINCIPAL and SURETY, appeared before me this day in person and acknowledged respectively, that they signed and delivered said instruments as their free and voluntary act for the uses and purposes therein set forth.

Given under my hand and notarial seal this _____ day of _____

My commission expires _____ _____ (Notary Public)

ELECTRONIC BID BOND

☐ **Electronic bid bond is allowed (box must be checked by LA if electronic bid bond is allowed)**

The Principal may submit an electronic bid bond, in lieu of completing the above section of the Proposal Bid Bond Form. By providing an electronic bid bond ID code and signing below, the Principal is ensuring the identified electronic bid bond has been executed and the Principal and Surety are firmly bound unto the LA under the conditions of the bid bond as shown above. (If PRINCIPAL is a joint venture of two or more contractors, an electronic bid bond ID code, company/Bidder name title and date must be affixed for each contractor in the venture.)

Electronic Bid Bond ID Code

_____ (Company/Bidder Name)

_____ (Signature and Title) _____ Date

BLR 12230 (Rev. 7/05

Illinois Department of Transportation

Bureau of Construction
2300 South Dirksen Parkway/Room 322
Springfield, Illinois 62764

Affidavit of Availability
For the Letting of _____

Instructions: Complete this form by either typing or using black ink. "Authorization to Bid" will not be issued unless both sides of this form are completed in detail. Use additional forms as needed to list all work.

Part I. Work Under Contract

List below all work you have under contract as either a prime contractor or a subcontractor. It is required to include all pending low bids not yet awarded or rejected. In a joint venture, list only that portion of the work which is the responsibility of your company. The uncompleted dollar value is to be based upon the most recent engineer's or owners estimate, and must include work subcontracted to others. If no work is contracted, show **NONE.**

	1	2	3	4	Awards Pending	
Contract Number						
Contract With						
Estimated Completion Date						
Total Contract Price						Accumulated Totals
Uncompleted Dollar Value if Firm is the Prime Contractor						
Uncompleted Dollar Value if Firm is the Subcontractor						
				Total Value of All Work		

Part II. Awards Pending and Uncompleted Work to be done with your own forces.

List below the uncompleted dollar value of work for each contract and awards pending to be completed with your own forces. All work subcontracted to others will be listed on the reverse of this form. In a joint venture, list only that portion of the work to be done by your company. If no work is contracted, show NONE.

						Accumulated Totals
Earthwork						
Portland Cement Concrete Paving						
HMA Plant Mix						
HMA Paving						
Clean & Seal Cracks/Joints						
Aggregate Bases & Surfaces						
Highway, R.R. and Waterway Structures						
Drainage						
Electrical						
Cover and Seal Coats						
Concrete Construction						
Landscaping						
Fencing						
Guardrail						
Painting						
Signing						
Cold Milling, Planning & Rotomilling						
Demolition						
Pavement Markings (Paint)						
Other Construction (List)						
						$ 0.00
Totals						

Disclosure of this information is **REQUIRED** to accomplish the statutory purpose as outlined in the "Illinois Procurement Code." Failure to comply will result in non-issuance of an "Authorization To Bid." This form has been approved by the State Forms Management Center.

Part III. Work Subcontracted to Others.

For each contract described in Part I, list all the work you have subcontracted to others.

	1	2	3	4	Awards Pending
Subcontractor					
Type of Work					
Subcontract Price					
Amount Uncompleted					
Subcontractor					
Type of Work					
Subcontract Price					
Amount Uncompleted					
Subcontractor					
Type of Work					
Subcontract Price					
Amount Uncompleted					
Subcontractor					
Type of Work					
Subcontract Price					
Amount Uncompleted					
Subcontractor					
Type of Work					
Subcontract Price					
Amount Uncompleted					
Total Uncompleted					

I, being duly sworn, do hereby declare that this affidavit is a true and correct statement relating to ALL uncompleted contracts of the undersigned for Federal, State, County, City and private work, including ALL subcontract work, ALL pending low bids not yet awarded or rejected and ALL estimated completion dates.

Subscribed and sworn to before me

this _____ day of _____ , _____ Type or Print Name _____

Officer or Director Title

_____ Signed _____

Notary Public

My commission expires _____

Company _____

(Notary Seal)

Address _____

_____

Illinois Department of Transportation

Apprenticeship or Training Program Certification

Return with Bid

Route	TR 25 TERMINAL AVE.
County	TAZEWELL
Local Agency	GROVELAND R.D.
Section	16-08000-02-GM (N-MFT)

All contractors are required to complete the following certification:

☒ For this contract proposal or for all groups in this deliver and install proposal.

☐ For the following deliver and install groups in this material proposal:

Illinois Department of Transportation policy, adopted in accordance with the provisions of the Illinois Highway Code, requires this contract to be awarded to the lowest responsive and responsible bidder. The award decision is subject to approval by the Department. In addition to all other responsibility factors, this contract or deliver and install proposal requires all bidders and all bidders' subcontractors to disclose participation in apprenticeship or training programs that are (1) approved by and registered with the United States Department of Labor's Bureau of Apprenticeship and Training, and (2) applicable to the work of the above indicated proposals or groups. Therefore, all bidders are required to complete the following certification:

I. Except as provided in paragraph IV below, the undersigned bidder certifies that it is a participant, either as an individual or as part of a group program, in an approved apprenticeship or training program applicable to each type of work or craft that the bidder will perform with its own employees.

II. The undersigned bidder further certifies for work to be performed by subcontract that each of its subcontractors submitted for approval either (A) is, at the time of such bid, participating in an approved, applicable apprenticeship or training program; or (B) will, prior to commencement of performance of work pursuant to this contract, establish participation in an approved apprenticeship or training program applicable to the work of the subcontract.

III. The undersigned bidder, by inclusion in the list in the space below, certifies the official name of each program sponsor holding the Certificate of Registration for all of the types of work or crafts in which the bidder is a participant and that will be performed with the bidder's employees. Types of work or craft that will be subcontracted shall be included and listed as subcontract work. The list shall also indicate any type of work or craft job category for which there is no applicable apprenticeship or training program available.

IV. Except for any work identified above, any bidder or subcontractor that shall perform all or part of the work of the contract or deliver and install proposal solely by individual owners, partners or members and not by employees to whom the payment of prevailing rates of wages would be required, check the following box, and identify the owner/operator workforce and positions of ownership. ☐

_____

_____

_____

_____

_____

The requirements of this certification and disclosure are a material part of the contract, and the contractor shall require this certification provision to be included in all approved subcontracts. The bidder is responsible for making a complete report and shall make certain that each type of work or craft job category that will be utilized on the project is accounted for and listed. The Department at any time before or after award may require the production of a copy of each applicable Certificate of Registration issued by the United States Department of Labor evidencing such participation by the contractor and any or all of its subcontractors. In order to fulfill the participation requirement, it shall not be necessary that any applicable program sponsor be currently taking or that it will take applications for apprenticeship, training or employment during the performance of the work of this contract or deliver and install proposal.

Bidder: _____ By: _____

(Signature)

Address: _____ Title: _____

RETURN WITH BID

Illinois Department of Transportation

Affidavit of Illinois Business Office

County TAZEWELL
Local Public Agency GROVELAND R.D.
Section Number 16-08000-02-GM (N-MFT)
Route TR 25 TERMINAL AVE.

State of _____)
) ss.
County of _____)

I, _____ of _____ , _____ ,
(Name of Affiant) (City of Affiant) (State of Affiant

being first duly sworn upon oath, states as follows:

1. That I am the _____ of _____ .
   officer or position bidder
2. That I have personal knowledge of the facts herein stated.
3. That, if selected under this proposal, _____ , will maintain a
   (bidder)

   business office in the State of Illinois which will be located in _____ County, Illinois.
4. That this business office will serve as the primary place of employment for any persons employed in the construction contemplated by this proposal.
5. That this Affidavit is given as a requirement of state law as provided in Section 30-22(8) of the Illinois Procurement Code.

_____
(Signature)

_____
(Print Name of Affiant)

This instrument was acknowledged before me on day of _____ , _____ .

(SEAL)

_____
(Signature of Notary Public)

INDEX
FOR
SUPPLEMENTAL SPECIFICATIONS
AND RECURRING SPECIAL PROVISIONS

Adopted April 1, 2016

This index contains a listing of SUPPLEMENTAL SPECIFICATIONS, frequently used RECURRING SPECIAL PROVISIONS, and LOCAL ROADS AND STREETS RECURRING SPECIAL PROVISIONS.

No ERRATA this year.

SUPPLEMENTAL SPECIFICATIONS

Std. Spec. Sec. Page No.

No Supplemental Specifications this year.

CHECK SHEET
FOR
RECURRING SPECIAL PROVISIONS

Adopted April 1, 2016

The following RECURRING SPECIAL PROVISIONS indicated by an "X" are applicable to this contract and are included by reference:

RECURRING SPECIAL PROVISIONS

CHECK SHEET #			PAGE NO.
1	☐	Additional State Requirements for Federal-Aid Construction Contracts	1
2	☐	Subletting of Contracts (Federal-Aid Contracts)	4
3	☐	EEO	5
4	☐	Specific EEO Responsibilities Non Federal-Aid Contracts	15
5	☐	Required Provisions - State Contracts	20
6	☐	Asbestos Bearing Pad Removal	26
7	☐	Asbestos Waterproofing Membrane and Asbestos Hot-Mix Asphalt Surface Removal	27
8	☐	Temporary Stream Crossings and In-Stream Work Pads	28
9	☐	Construction Layout Stakes Except for Bridges	29
10	☐	Construction Layout Stakes	32
11	☐	Use of Geotextile Fabric for Railroad Crossing	35
12	☐	Subsealing of Concrete Pavements	37
13	☐	Hot-Mix Asphalt Surface Correction	41
14	☐	Pavement and Shoulder Resurfacing	43
15	☐	Patching with Hot-Mix Asphalt Overlay Removal	44
16	☐	Polymer Concrete	45
17	☐	PVC Pipeliner	47
18	☐	Bicycle Racks	48
19	☐	Temporary Portable Bridge Traffic Signals	50
20	☐	Work Zone Public Information Signs	52
21	☐	Nighttime Inspection of Roadway Lighting	53
22	☐	English Substitution of Metric Bolts	54
23	☐	Calcium Chloride Accelerator for Portland Cement Concrete	55
24	☐	Quality Control of Concrete Mixtures at the Plant	56
25	☐	Quality Control/Quality Assurance of Concrete Mixtures	64
26	☐	Digital Terrain Modeling for Earthwork Calculations	80
27	☐	Pavement Marking Removal	82
28	☐	Preventive Maintenance – Bituminous Surface Treatment	83
29	☐	Preventive Maintenance – Cape Seal	89
30	☐	Preventive Maintenance – Micro-Surfacing	104
31	☐	Preventive Maintenance – Slurry Seal	115
32	☐	Temporary Raised Pavement Markers	125
33	☐	Restoring Bridge Approach Pavements Using High-Density Foam	126

CHECK SHEET
FOR
LOCAL ROADS AND STREETS RECURRING SPECIAL PROVISIONS

Adopted April 1, 2016

The following LOCAL ROADS AND STREETS RECURRING SPECIAL PROVISIONS indicated by an "X" are applicable to this contract and are included by reference:

LOCAL ROADS AND STREETS RECURRING SPECIAL PROVISIONS

CHECK SHEET #			PAGE NO.
LRS 1		**Reserved**	130
LRS 2	☐	Furnished Excavation	131
LRS 3	☒	Work Zone Traffic Control Surveillance	132
LRS 4	☒	Flaggers in Work Zones	133
LRS 5	☒	Contract Claims	134
LRS 6	☒	Bidding Requirements and Conditions for Contract Proposals	135
LRS 7	☐	Bidding Requirements and Conditions for Material Proposals	141
LRS 8		**Reserved**	147
LRS 9	☐	Bituminous Surface Treatments	148
LRS 10		**Reserved**	149
LRS 11	☒	Employment Practices	150
LRS 12	☒	Wages of Employees on Public Works	152
LRS 13	☒	Selection of Labor	154
LRS 14	☐	Paving Brick and Concrete Paver Pavements and Sidewalks	155
LRS 15	☒	Partial Payments	158
LRS 16	☐	Protests on Local Lettings	159
LRS 17	☒	Substance Abuse Prevention Program	160
LRS 18	☐	Multigrade Cold Mix Asphalt	161

TABLE OF CONTENTS

Page 1	Bidding Requirements and Conditions
	Description of Work
	Traffic
	Traffic Control Plan
Page 2	Traffic Control Plan (cont'd.)
	Bituminous Surface Treatment, Class A
Page 3	Bituminous Surface Treatment, Class A (cont'd.)
	Weight Limits
	Pre-Construction Meeting
	Time Schedule
Page 4-6	BDE Special Provisions Check Sheets
Page 7-10	Errata for the 2016 Standard Specifications
Page 11-17	LR Special Provisions
Page 18	Project Location Map
Page 19	Quantity Sheet
Page 20	Standard for Bituminous Surface Treatment, CL A-3 at Entrances, etc.
Page 21	Highway Standard 701006-05
Page 22	Highway Standard 701011-04
Page 23	Highway Standard 701201-04
Page 24	Highway Standard 701301-04
Page 25	Highway Standard 701306-03
Page 26-28	Highway Standard 701901-05
Page 29	BLR Standard 21-9
Page 30-35	Prevailing Wage Rates, Trade Categories and Classes

TAZEWELL COUNTY, ILLINOIS
SPECIAL PROVISIONS

The following Special Provisions supplement the "Standard Specifications for Road and Bridge Construction", Adopted April 1, 2016, the latest edition of the "Manual on Uniform Traffic Control Devices for Streets and Highways" and the "Manual of Test Procedures of Materials" in effect on the date of invitation of bids, and the Supplemental Specifications and Recurring Special provisions indicated on the Check Sheet included here in which apply to and govern the construction of Sec. 16-08000-02-GM (N-MFT), and in case of conflict with any part, or parts, of said Specifications, the said Special Provisions shall take precedence and shall govern.

BIDDING REQUIREMENTS AND CONDITIONS: Pre-qualification of bidders with the Illinois Department of Transportation is required.

DESCRIPTION OF WORK: The work of this section consists of the construction of a Bituminous Surface Treatment, Class A-3 over an existing gravel surface.

TRAFFIC: The roads shall remain open for both local and through traffic except during the following operations: Bituminous Materials Prime Coat (MC-30) and Bituminous Surface Treatment, Class A-3.

TRAFFIC CONTROL PLAN: Traffic Control shall be in accordance with the applicable sections of the "Standard Specifications for Road and Bridge Construction", the applicable guidelines contained in the "Manual on Uniform Traffic Control Devices for Streets and Highways", these Special Provisions, and any special details and Highway Standards contained here in and in the plans.

Special attention is called to Articles 107.09 and 107.14 of the "Standard Specifications for Road and Bridge Construction" and the Traffic Control Standards 701006-05, 701011-04, 701201-04, 701301-04, 701306-03, 701901-05, and BLR 21-9.

Construction signs shall meet the current Standard Specifications for Traffic Control Items. All Traffic Control Standards shall be incidental to the contract. The Contractor shall be responsible for all traffic control operations as follows, with no additional compensation being allowed:

The presence of temporary traffic control drawings or standards in the proposal or contract, whether a pay item or not, does not relieve the Contractor of his obligation to the public. The Contractor shall provide, if conditions warrant by the engineer, all protection deemed necessary beyond that shown in the proposal or Special Provisions.

TRAFFIC CONTROL PLAN: (Cont'd.)

1. The Contractor shall provide two flaggers and two pickup trucks, each equipped with a mounted yellow flashing light, a mounted "Road Closed" sign (R11-2), a mounted "Fresh Oil" sign (W21-2), and a "Flagger Traffic Control Sign" (Stop/Slow paddle). These flaggers shall be placed at the intersection immediately ahead of and behind the seal coat operation to control the traffic. Flaggers must hold the "Flagger traffic Control Sign" (Stop/Slow paddle).

2. The Contractor must equip all of their oil distributors, chip spreaders and rollers with a mounted yellow flashing light.

3. The Contractor shall equip all of their rollers with a "Fresh Oil" sign (W21-2).

4. The Contractor shall place a "Road Closed Ahead" sign (W20-3) 750 feet prior to the intersection where the required pickup truck is controlling traffic if the pickup truck is not visible at that point to oncoming traffic.

Basis of payment: All required Traffic Control shall be paid for at the contract-lump sum price for **TRAFFIC CONTROL AND PROTECTION, SPECIAL.**

BITUMINOUS SURFACE TREATMENT, CLASS A: This work shall conform to the applicable portions of Section 403, Bituminous Surface Treatment, Class A of the "Standard Specifications for Road and Bridge Construction", with the following exceptions and inclusions:

Article 403.03 EQUIPMENT- Add the following:
(e) Three Wheel or Tandem Roller 1101.01

MATERIAL: The Bituminous Materials shall be MC-30 and PG52-28 where specified on the quantity sheets.

The Seal Coat Aggregate shall be CA-14 where specified on the quantity sheet.

The Seal Coat Aggregate shall be CA-16 where specified on the quantity sheet.

TAZEWELL COUNTY, ILLINOIS
SPECIAL PROVISIONS

BITUMINOUS SURFACE TREATMENT, CLASS A: (Cont'd.)

APPLICATION: Rates per Square Yard (Estimated)

When using PG52-28 for Bituminous Surface Treatment, Class A-3:

Bituminous Materials (Cover Coats)	- 0.33 gallon
Bituminous Materials (Seal Coat)	- 0.31 gallon
Cover Coat Aggregate (CA-14)	- 26 pounds
Seal Coat Aggregate (CA-16)	- 24 pounds

Article 403.13 SEAL COAT: Add the following to Article 403.13 of the Standard Specifications:

Sweeping will not commence until 10 days after seal coat work is completed.

Basis of Payment: This will be paid for the contract unit price per gallon for BITUMINOUS MATERIALS (PRIME COAT) MC-30, BITUMINOUS MATERIALS (COVERS & SEAL COAT) PG52-28 and the contract unit price per ton for COVER COAT AGGREGATE (CA-14) & SEAL COAT AGGREGATE (CA-16).

WEIGHT LIMITS: Legal weight limits shall be observed on Groveland Road District roads and the structures they contain at all times.

PRE-CONSTRUCTION MEETING: A pre-construction meeting for this Section is required between the Contractor, Highway Commissioner and a representative from Terminal Avenue at least two weeks prior to construction to properly notify the residents.

TIME SCHEDULE: The specified completion date for this project is August 15, 2016.

BDE SPECIAL PROVISIONS
For the April 22 and June 10, 2016 Lettings

The following special provisions indicated by an "x" are applicable to this contract and will be included by the Project Development and Implementation Section of the BD&E. An * indicates a new or revised special provision for the letting.

	File Name	#		Special Provision Title	Effective	Revised
	80099	1		Accessible Pedestrian Signals (APS)	April 1, 2003	Jan. 1, 2014
*	80274	2		Aggregate Subgrade Improvement	April 1, 2012	April 1, 2016
	80192	3		Automated Flagger Assistance Device	Jan. 1, 2008	
	80173	4		Bituminous Materials Cost Adjustments	Nov. 2, 2006	July 1, 2015
	80241	5		Bridge Demolition Debris	July 1, 2009	
	5026I	6		Building Removal-Case I (Non-Friable and Friable Asbestos)	Sept. 1, 1990	April 1, 2010
	5048I	7		Building Removal-Case II (Non-Friable Asbestos)	Sept. 1, 1990	April 1, 2010
	5049I	8		Building Removal-Case III (Friable Asbestos)	Sept. 1, 1990	April 1, 2010
	5053I	9		Building Removal-Case IV (No Asbestos)	Sept. 1, 1990	April 1, 2010
	80360	10		Coarse Aggregate Quality	July 1, 2015	
	80198	11		Completion Date (via calendar days)	April 1, 2008	
	80199	12		Completion Date (via calendar days) Plus Working Days	April 1, 2008	
	80293	13		Concrete Box Culverts with Skews > 30 Degrees and Design Fills ≤ 5 Feet	April 1, 2012	April 1, 2015
*	80311	14		Concrete End Sections for Pipe Culverts	Jan. 1, 2013	April 1, 2016
*	80277	15		Concrete Mix Design – Department Provided	Jan. 1, 2012	April 1, 2016
	80261	16		Construction Air Quality – Diesel Retrofit	June 1, 2010	Nov. 1, 2014
*	80029	17		Disadvantaged Business Enterprise Participation	Sept. 1, 2000	Jan. 2, 2016
*	80363	18		Engineer's Field Office	April 1, 2016	
	80358	19		Equal Employment Opportunity	April 1, 2015	
*	80364	20	✔	Errata for the 2016 Standard Specifications	April 1, 2016	
	80229	21		Fuel Cost Adjustment	April 1, 2009	July 1, 2015
	80304	22		Grooving for Recessed Pavement Markings	Nov. 1, 2012	Aug. 1, 2014
*	80246	23		Hot-Mix Asphalt – Density Testing of Longitudinal Joints	Jan. 1, 2010	April 1, 2016
*	80347	24		Hot-Mix Asphalt – Pay for Performance Using Percent Within Limits – Jobsite Sampling	Nov. 1, 2014	April 1, 2016
*	80336	25		Longitudinal Joint and Crack Patching	April 1, 2014	April 1, 2016
	80045	26		Material Transfer Device	June 15, 1999	Aug. 1, 2014
*	80342	27		Mechanical Side Tie Bar Inserter	Aug. 1, 2014	April 1, 2016
	80165	28		Moisture Cured Urethane Paint System	Nov. 1, 2006	Jan. 1, 2010
*	80361	29		Overhead Sign Structures Certification of Metal Fabricator	Nov. 1, 2015	April 1, 2016
*	80349	30		Pavement Marking Blackout Tape	Nov. 1, 2014	April 1, 2016
*	80298	31		Pavement Marking Tape Type IV	April 1, 2012	April 1, 2016
*	80365	32		Pedestrian Push-Button	April 1, 2016	
*	80359	33		Portland Cement Concrete Bridge Deck Curing	April 1, 2015	April 1, 2016
*	80353	34		Portland Cement Concrete Inlay or Overlay	Jan. 1, 2015	April 1, 2016
*	80338	35		Portland Cement Concrete Partial Depth Hot-Mix Asphalt Patching	April 1, 2014	April 1, 2016
*	80300	36		Preformed Plastic Pavement Marking Type D - Inlaid	April 1, 2012	April 1, 2016
	80328	37		Progress Payments	Nov. 2, 2013	
	3426I	38		Railroad Protective Liability Insurance	Dec. 1, 1986	Jan. 1, 2006
	80157	39		Railroad Protective Liability Insurance (5 and 10)	Jan. 1, 2006	
*	80306	40		Reclaimed Asphalt Pavement (RAP) and Reclaimed Asphalt Shingles (RAS)	Nov. 1, 2012	April 1, 2016
*	80340	41		Speed Display Trailer	April 2, 2014	April 1, 2016
	80127	42		Steel Cost Adjustment	April 2, 2004	July 1, 2015
	80362	43		Steel Slag in Trench Backfill	Jan. 1, 2016	
*	80317	44		Surface Testing of Hot-Mix Asphalt Overlays	Jan. 1, 2013	April 1, 2016

File Name	#		Special Provision Title	Effective	Revised
80355	45		Temporary Concrete Barrier	Jan. 1, 2015	July 1, 2015
20338	46		Training Special Provisions	Oct. 15, 1975	
80318	47		Traversable Pipe Grate	Jan. 1, 2013	April 1, 2014
* 80288	48		Warm Mix Asphalt	Jan. 1, 2012	April 1, 2016
80302	49		Weekly DBE Trucking Reports	June 2, 2012	April 2, 2015
80289	50		Wet Reflective Thermoplastic Pavement Marking	Jan. 1, 2012	
80071	51		Working Days	Jan. 1, 2002	

The following special provisions and recurring special provisions are in the 2016 Standard Specifications.

File Name	Special Provision Title	New Location	Effective	Revised
80240	Above Grade Inlet Protection	Articles 280.02, 280.04, and 1081.15	July 1, 2009	Jan. 1, 2012
80310	Coated Galvanized Steel Conduit	Article 811.03	Jan. 1, 2013	Jan. 1, 2015
80341	Coilable Nonmetallic Conduit	Article 1088.01	Aug. 1, 2014	Jan. 1, 2015
80294	Concrete Box Culverts with Skews ≤ 30 Degrees Regardless of Design Fill and Skews > 30 Degrees with Design Fills > 5 Feet	Article 540.04	April 1, 2012	April 1, 2014
80334	Concrete Gutter, Curb, Median, and Paved Ditch	Articles 606.02, 606.07, and 1050.04	April 1, 2014	Aug. 1, 2014
80335	Contract Claims	Article 109.09	April 1, 2014	
Chk Sht #27	English Substitution of Metric Reinforcement Bars	Article 508.09	April 1, 1996	Jan. 1, 2011
80265	Friction Aggregate	Articles 1004.01 and 1004.03	Jan. 1, 2011	Nov. 1, 2014
80329	Glare Screen	Sections 638 and 1085	Jan. 1, 2014	
Chk Sht #20	Guardrail and Barrier Wall Delineation	Sections 635, 725, 782, and 1097	Dec. 15, 1993	Jan. 1, 2012
80322	Hot-Mix Asphalt – Mixture Design Composition and Volumetric Requirements	Sections 312, 355, 406, 407, 442, 482, 601, 1003, 1004, 1030, and 1102	Nov. 1, 2013	Nov. 1, 2014
80323	Hot-Mix Asphalt – Mixture Design Verification and Production	Sections 406, 1030, and 1102	Nov. 1, 2013	Nov. 1, 2014
80348	Hot-Mix Asphalt – Prime Coat	Sections 403, 406, 407, 408, 1032, and 1102	Nov. 1, 2014	
80315	Insertion Lining of Culverts	Sections 543 and 1029	Jan. 1, 2013	Nov. 1, 2013
80351	Light Tower	Article 1069.08	Jan. 1, 2015	
80324	LRFD Pipe Culvert Burial Tables	Sections 542 and 1040	Nov. 1, 2013	April 1, 2015
80325	LRFD Storm Sewer Burial Tables	Sections 550 and 1040	Nov. 1, 2013	April 1, 2015
80337	Paved Shoulder Removal	Article 440.07	April 1, 2014	
80254	Pavement Patching	Article 701.17	Jan. 1, 2010	
80352	Pavement Striping - Symbols	Article 780.14	Jan. 1, 2015	
Chk Sht #19	Pipe Underdrains	Section 601 and Articles 1003.01, 1003.04, 1004.05, 1040.06, and 1080.05	Sept. 9, 1987	Jan. 1, 2007
80343	Precast Concrete Handhole	Articles 814.02, 814.03, and 1042.17	Aug. 1, 2014	
80350	Retroreflective Sheeting for Highway Signs	Article 1091.03	Nov. 1, 2014	
80327	Reinforcement Bars	Section 508 and Articles 421.04, 442.06, 1006.10	Nov. 1, 2013	
80344	Rigid Metal Conduit	Article 1088.01	Aug. 1, 2014	
80354	Sidewalk, Corner, or Crosswalk Closure	Article 1106.02	Jan. 1, 2015	April 1, 2015
80301	Tracking the Use of Pesticides	Article 107.23	Aug. 1, 2012	
80356	Traffic Barrier Terminals Type 6 or 6B	Article 631.02	Jan. 1, 2015	
80345	Underpass Luminaire	Articles 821.06 and 1067.04	Aug. 1, 2014	April 1, 2015

File Name	Special Provision Title	New Location	Effective	Revised
80357	Urban Half Road Closure with Mountable Median	Articles 701.18, 701.19, and 701.20	Jan. 1, 2015	July 1, 2015
80346	Waterway Obstruction Warning Luminaire	Article 1067.07	Aug. 1, 2014	April 1, 2015

The following special provisions require additional information from the designer. The additional information needs to be included in a separate document attached to this check sheet. The Project Development and Implementation section will then include the information in the applicable special provision. The Special Provisions are:

- Bridge Demolition Debris
- Building Removal-Case I
- Building Removal-Case II
- Building Removal-Case III
- Building Removal-Case IV
- Completion Date
- Completion Date Plus Working Days
- DBE Participation
- Material Transfer Device
- Railroad Protective Liability Insurance
- Training Special Provisions
- Working Days

ERRATA FOR THE 2016 STANDARD SPECIFICATIONS (BDE)

Effective: April 1, 2016

Page 84 Article 204.02. In the seventh line of the first paragraph change "AASHTO T 99 (Method C)" to "Illinois Modified AASHTO T 99 (Method C)".

Page 90 Article 205.06. In the first sentence of the third paragraph change "AASHTO T 99 (Method C)" to "Illinois Modified AASHTO T 99 (Method C)".

Page 91 Article 205.06. In the first sentence of the fourth paragraph change "AASHTO T 99 (Method C)" to "Illinois Modified AASHTO T 99 (Method C)", and in the second sentence change "AASHTO T 224" to "Illinois Modified AASHTO T 99 (Annex A1)".

Page 91 Article 205.06. In the second line of the fifth paragraph change "AASHTO T 191" to "Illinois Modified AASHTO T 191".

Page 91 Article 205.06. In the sixth line of the eighth paragraph change "AASHTO T 99 (Method C)" to "Illinois Modified AASHTO T 99 (Method C)".

Page 148 Article 302.09. In the second sentence of the fifth paragraph change "AASHTO T 191" to "Illinois Modified AASHTO T 191", and in the third sentence change "AASHTO T 99" to "Illinois Modified AASHTO T 99".

Page 152 Article 310.09. In the second sentence of the second paragraph change "AASHTO T 191" to "Illinois Modified AASHTO T 191", and in the third sentence change "AASHTO T 99" to "Illinois Modified AASHTO T 99".

Page 155 Article 311.05(a). In the first sentence of the fifth paragraph change "AASHTO T 99 (Method C)" to "Illinois Modified AASHTO T 99 (Method C)", and in the second sentence change "AASHTO T 224" to "Illinois Modified AASHTO T 99 (Annex A1)".

Page 155 Article 311.05(a). In the second line of the sixth paragraph change "AASHTO T 191" to "Illinois Modified AASHTO T 191".

Page 163 Article 351.05(a). In the second sentence of the fifth paragraph change "AASHTO T 99 (Method C)" to "Illinois Modified AASHTO T 99 (Method C)", and in the third sentence change "AASHTO T 224" to "Illinois Modified AASHTO T 99 (Annex A1)".

Page 163 Article 351.05(a). In the second line of the sixth paragraph change "AASHTO T 191" to "Illinois Modified AASHTO T 191".

Page 169 Article 352.11. In the second sentence of the fourth paragraph change "AASHTO T 191" to "Illinois Modified AASHTO T 191", and in the third sentence change "AASHTO T 134 (Method B)" to "Illinois Modified AASHTO T 134 (Method B)".

Page 169 Article 352.12. In the first sentence of the first paragraph change "AASHTO T 22" to "Illinois Modified AASHTO T 22", and in the second sentence change "AASHTO T 134 (Method B)" to "Illinois Modified AASHTO T 134 (Method B)".

Page 196 Article 406.07(a). After the footnotes in Table 1 - Minimum Roller Requirements for HMA add the following:

"EQUIPMENT DEFINITION

V_s - Vibratory roller, static mode, minimum 125 lb/in. (2.2 kg/mm) of roller width. Maximum speed = 3 mph (5 km/h) or 264 ft/min (80 m/min). If the vibratory roller does not eliminate roller marks, its use shall be discontinued and a tandem roller, adequately ballasted to remove roller marks, shall be used.

V_D - Vibratory roller, dynamic mode, operated at a speed to produce not less than 10 impacts/ft (30 impacts/m).

P - Pneumatic-tired roller, max. speed 3 1/2 mph (5.5 km/h) or 308 ft/min (92 m/min). The pneumatic-tired roller shall have a minimum tire pressure of 80 psi (550 kPa) and shall be equipped with heat retention shields. The self-propelled pneumatic-tired roller shall develop a compression of not less than 300 lb (53 N) nor more than 500 lb (88 N) per in. (mm) of width of the tire tread in contact with the HMA surface.

T_B - Tandem roller for breakdown rolling, 8 to 12 tons (7 to 11 metric tons), 250 to 400 lb/in. (44 to 70 N/mm) of roller width, max. speed = 3 1/2 mph (5.5 km/h) or 308 ft/min (92 m/min).

T_F - Tandem roller for final rolling, 200 to 400 lb/in. (35 to 70 N/mm) of roller width with minimum roller width of 50 in. (1.25 m). Ballast shall be increased if roller marks are not eliminated. Ballast shall be decreased if the mat shoves or distorts.

3W- Three wheel roller, max. speed = 3 mph (5 km/h) or 264 ft/min (80 m/min), 300 to 400 lb/in. (53 to 70 N/mm) of roller width. The three-wheel roller shall weigh 10 to 12 tons (9 to 11 metric tons)."

Page 331 Article 505.04(p). Under Range of Clearance in the first table change "in. x 10^{-6}" to "in. x 10^{-3}".

Page 444 Article 542.03. In the Notes in Table IIIB add "CPP Corrugated Polypropylene (CPP) pipe with smooth interior".

Page 445 Article 542.03. In the fourth column in Table IIIB (metric) change the heading for Type 5 pipe from "CPE" to "CPP".

Page 445 Article 542.03. In the Notes in Table IIIB (metric) change "PE Polyethylene (PE) pipe with a smooth interior" to "CPP Corrugated Polypropylene (CPP) pipe with smooth interior".

Page 449 Article 542.04(f)(2). In the third line of the second paragraph change "AASHTO T 99 (Method C)" to "Illinois Modified AASHTO T 99 (Method C)".

Page 544 Article 639.03. In the first sentence of the first paragraph change "AASHTO Standard Specifications for Structural Supports for Highway Signs, Luminaires, Traffic Signals," to "AASHTO "LRFD Specifications for Structural Supports for Highway Signs, Luminaires, and Traffic Signals,"".

Page 546 Article 640.03. In the first sentence of the first paragraph change "AASHTO Standard Specifications for Structural Supports for Highway Signs, Luminaires, and Traffic Signals" to "AASHTO "LRFD Specifications for Structural Supports for Highway Signs, Luminaires, and Traffic Signals"".

Page 548 Article 641.03. In the first sentence of the first paragraph change "AASHTO Standard Specifications for Structural Supports for Highway Signs, Luminaire and Traffic Signals," to "AASHTO "LRFD Specifications for Structural Supports for Highway Signs, Luminaires, and Traffic Signals,"".

Page 621 Article 727.03. In the first sentence of the third paragraph change "AASHTO Standard Specifications for Structural Supports for Highway Signs, Luminaires and Traffic Signals" to "AASHTO "LRFD Specifications for Structural Supports for Highway Signs, Luminaires, and Traffic Signals"".

Page 629 Article 734.03(a). In the fourth line of the second paragraph change "AASHTO T 99 (Method C)" to "Illinois Modified AASHTO T 99 (Method C)".

Page 649 Article 801.02. In the first sentence of the first paragraph change "AASHTO's Standard Specifications for Structural Supports for Highway Signs, Luminaires, and Traffic Signals" to "AASHTO "LRFD Specifications for Structural Supports for Highway Signs, Luminaires, and Traffic Signals"".

Page 742 Article 1003.04(c). Under Gradation in the table change "(see Article 1003.02(c))" to "(see Article 1003.01(c))".

Page 755 Article 1004.03(b). Revise the third sentence of the first paragraph to read "For Class A (seal or cover coat), and other binder courses, the coarse aggregate shall be Class C quality or better.".

Page 809 Article 1020.04(e). In the third line of the first paragraph change "ITP SCC-3" to "ITP SCC-4".

Page 945 Article 1069.05. In the first sentence of the tenth paragraph change ""Standard Specifications for Structural Supports for Highway Signs, Luminaires, and Traffic Signals"" to "AASHTO "LRFD Specifications for Structural Supports for Highway Signs, Luminaires, and Traffic Signals"".

Page 961 Article 1070.04(b)(1). In the third sentence of the first paragraph change ""Standard Specifications of Structural Supports for Highway Signs, Luminaires and Traffic Signals" published by AASHTO" to "AASHTO "LRFD Specifications for Structural Supports for Highway Signs, Luminaires, and Traffic Signals"".

Page 989 Article 1077.01. In the second sentence of the first paragraph change "Standard Specifications for Structural Supports for Highway Signs, Luminaires, and Traffic Signals, as published by AASHTO" to "AASHTO "LRFD Specifications for Structural Supports for Highway Signs, Luminaires, and Traffic Signals"".

Page 1121 Article 1103.13(a). In the first line of the first paragraph change "Bridge Deck Approach Slabs." to "Bridge Deck and Approach Slabs.".

80364

State of Illinois
Department of Transportation
Bureau of Local Roads and Streets

SPECIAL PROVISION
FOR
INSURANCE

Effective: February 1, 2007
Revised: August 1, 2007

All references to Sections or Articles in this specification shall be construed to mean specific Section or Article of the Standard Specifications for Road and Bridge Construction, adopted by the Department of Transportation.

The Contractor shall name the following entities as additional insured under the Contractor's general liability insurance policy in accordance with Article 107.27:

Tazewell County

Groveland Road District

The entities listed above and their officers, employees, and agents shall be indemnified and held harmless in accordance with Article 107.26.

State of Illinois
Department of Transportation
Bureau of Local Roads and Streets

SPECIAL PROVISION
FOR
EQUIPMENT RENTAL RATES

Effective: January 1, 2012

All references to Sections or Articles in this specification shall be construed to mean a specific Section or Article of the Standard Specifications for Road and Bridge Construction, adopted by the Department of Transportation.

Replace Article 109.04(b)(4) with the following:

"(4) Equipment. For any machinery or special equipment (other than small tools) the use of which has been authorized by the Engineer, the Contractor will be paid according to the latest revision of “SCHEDULE OF AVERAGE ANNUAL EQUIPMENT OWNERSHIP EXPENSE” and latest index factor as issued by the Illinois Department of Transportation. The equipment should be of a type and size reasonably required to complete the extra work.”

State of Illinois
Department of Transportation
Bureau of Local Roads and Streets

SPECIAL PROVISION FOR CONSTRUCTION AND MAINTENANCE SIGNS

Effective: January 1, 2004
Revised: June 1, 2007

All references to Sections or Articles in this specification shall be construed to mean a specific Section or Article of the Standard Specifications for Road and Bridge Construction, adopted by the Department of Transportation.

701.14. Signs. Add the following paragraph to Article 701.14:

All warning signs shall have minimum dimensions of 1200 mm x 1200 mm (48" x 48") and have a black legend on a fluorescent orange reflectorized background, meeting, as a minimum, Type AP reflectivity requirements of Table 1091-2 in Article 1091.02.

State of Illinois
Department of Transportation
Bureau of Local Roads and Streets

SPECIAL PROVISION
FOR
COARSE AGGREGATE FOR BITUMINOUS SURFACE TREATMENT

Effective: January 1, 2002
Revised: January 1, 2007

All references to Sections or Articles in this special provision shall be construed to mean specific Section or Article of the Standard Specifications for Road and Bridge Construction, adopted by the Department of Transportation.

This work shall be performed according to Section 403 and the following:

1004.01 Materials. Add the following to the gradation tables in subparagraph (c) of Article 1004.01:

Coarse Aggregate Gradations					
Sieve Size Percent Passing					
Grad No.	12.5 mm ½ in.	9.5 mm 3/8 in.	4.75 mm #4	2.36 mm #8	1.18 mm #16
CA 20	100	92 ± 8	20 ± 10	5 ± 5	3 ±3

1004.03 Coarse Aggregate for Hot-Mix Asphalt (HMA). Revise the first line of the table in subparagraph (c) of Article 1004.03 to read:

Use	Size/Application	Gradation No.
Class A-1, 2, & 3	3/8 in. (10 mm) Seal	CA 20 3/

Add the following note to the end of subparagraph (c) of Article 1004.03:

"3/ CA16 or CM16 produced under the AGCS Program with a master band may be used if it meets the gradation requirements specified for CA20 in Article 1004.01(c)"

Amend the Aggregate Gradation Control System (AGCS) Policy Memorandum to add the following:

"CA 20 shall be produced under the AGCS program. However, the gradation bands may not be adjusted."

State of Illinois
DEPARTMENT OF TRANSPORTATION
Bureau of Local Roads & Streets

SPECIAL PROVISION FOR EMULSIFIED ASPHALTS

Effective: January 1, 2007
Revised: February 7, 2008

All references to Sections and Articles in this Special Provision shall be construed to mean specific Sections and Articles in the Standard Specifications for Road and Bridge Construction adopted by the Department of Transportation.

Replace the table after Note 2 in Article 403.02 with the following:

Type of Construction	Bituminous Materials Recommended for Weather Conditions Indicated	
	Warm [15 °C to 30 °C]* [(60 °F to 85 °F)]*	Hot [30 °C Plus]* [(85 °F Plus)]*
Prime	MC-30, PEP	MC-30, PEP
Cover Coat and Seal Coat	RS-2, CRS-2, RC-800, RC-3000, MC-800, MC-3000, SC-3000, HFE-90, HFE-150, HFE-300, HFRS-2, PEA**	RS-2, CRS-2, RC-800, RC-3000, MC-800, MC-3000, SC-3000, PG46-28, PG52-28, HFE-90, HFE-150, HFE-300, HFRS-2, PEA**

* Temperature of the air in the shade at the time of application.
** PEA is only allowed on roads with low traffic volumes

Replace the table after Note 2 in Article 406.02 with the following:

Type of Construction	Bituminous Materials Recommended
Prime (tack) on Brick, Concrete, or Bituminous Bases (Note 3)	SS-1, SS-1h, CSS-1, CSS-1h, HFE-90, RC-70
Prime on Aggregate Bases (Note 4)	MC-30, PEP
Mixture for Cracks, Joints, and Flangeways	PG58-22, PG64-22

Note 3. When emulsified asphalts are used, they shall be diluted with an equal volume of potable water. HFE emulsions shall be diluted by the manufacturer. The diluted material shall be thoroughly agitated within 24 hours of application and show no separation of water and emulsion. The diluted material shall not be returned to an approved emulsion storage tank.

Note 4. Preparation of the bituminous PEP shall be as specified in Article 403.05.

Replace the table in Article 1032.04 with the following:

Spraying Application Temperature Ranges		
Type and Grade of Bituminous Material	Temperature Ranges	
	°F min. - max.	°C min. - max.
PEP	60 - 130	15 - 55
PEA	140 - 190	60 -88
MC-30	85 - 190	30 - 90
MC-70, RC-70, SC-70	120 - 225	50 - 105
MC-250, SC-250	165 - 270	75 - 130
MC-800, SC-800	200 - 305	95 - 150
MC-3000, SC-3000	230 - 345	110 - 175
PG46-28	275 - 385	135 - 195
PG52-28	285 - 395	140 - 200
RS-2, CRS-2	110 - 160	45 - 70
SS-1, SS-1h, CSS-1, CSS-1h	75 - 130	25 - 55
SS-1hP, CSS-1hP	75 - 130	25 - 55
HFE-90, HFE-150, HFE-300	150 - 180	65 - 80
HFP, CRSP, HFRS-2	150 - 180	65 - 80
E-2	85 - 190	30 - 90
E-3	120 - 225	50 - 105
E-4	165 - 270	75 - 130

Add subparagraph (g) to Article 1032.06:

(g) Penetrating Emulsified Asphalt (PEA). The penetrating emulsified asphalt shall meet the following requirements when tested according to AASHTO T59:

Viscosity, Saybolt Fural @ 25°C (77°F),	sec:	20 - 500
Sieve Test, retained on 850 μm (No. 20) sieve, maximum,	%:	0.10
Storage Stability Test, 1 day, maximum,	%:	1
Float Test @ 60°C (140°F), minimum,	sec:	150
Stone Coating Test, 3 minutes,	:	Stone Coated Thoroughly
Particle Charge	:	Negative
pH, minimum	:	7.3
Distillation Test:		
Distillation to 260°C (500°F) Residue, minimum	%:	65
Oil Distillate by Volume, maximum	%:	3
Test on residue from distillation:		
Penetration @ 25°C (77°F), 100 g, 5 sec, minimum	dmm:	300

Replace the last sentence and table of Article 1032.06 with the following:

The different grades are, in general, used for the following.

Grade	Use
SS-1, SS-1h, CSS-1, CSS-1h, HFE 90, SS-1hP, CSS-1hP	Tack or fog seal
PEP	Bituminous surface treatment prime
RS-2, HFE 90, HFE 150, HFE 300, CRSP, HFP, CRS-2, HFRS-2, PEA	Bituminous surface treatment
CSS-1h Latex Modified	Microsurfacing

GROVELAND ROAD DISTRICT
TWP. 25N, R 4W, 3rd P.M.
16-08000-02-GM (N-MFT)

TR 25 - TERMINAL AVE.

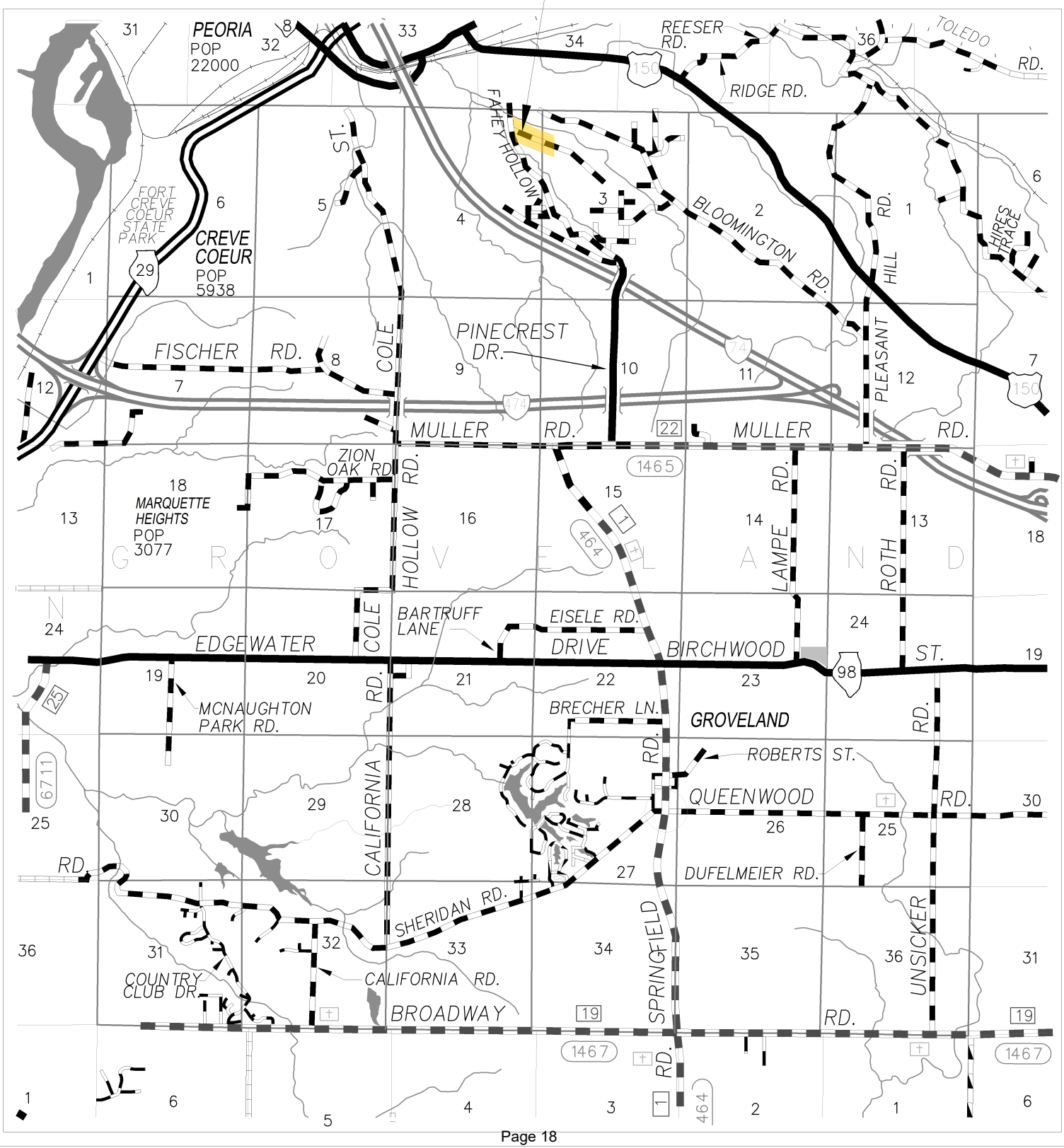

QUANTITIES
(Bituminous Class A-3)

Route/Section	Length	Width	Roadway Prime Area	Roadway Surface Area
Terminal Ave. / TR 25B	1,750 LF	17'	3,611 SY *	3,417 SY *
Entrances & Mailboxes:			788 SY	788 SY
TOTALS:	**1,750 LF**		**4,399 SY**	**4,205 SY**

*Denotes area includes intersection radii

Preparation of Base:

Prime Area = 4,399 SQ YD

Bituminous Materials Prime Coat (MC-30):

4,399 SQ YD x 0.30 = 1,320 GALLON

Bituminous Materials (Covers and Seal Coat) PG52-28:

4,205 SY x 0.33 GAL/SY x 2 = 2,775 GAL
4,205 SY x 0.31 GAL/SY = 1,304 GAL
Total = 4,079 GALLON

Cover Coat Aggregate (CA-14):

4,205 SY x 26#/SY x 2 / 2000# = 109 TON

Seal Coat Aggregate (CA-16):

4,205 SY x 24#/SY / 2000# = 50 TON

Traffic Control and Protection (Special):

For entire project = 1 LUMP SUM

STANDARD FOR BITUMINOUS SURFACE TREATMENT, CLASS A-3 AT ENTRANCES AND MAILBOXES

MAILBOX TURNOUT

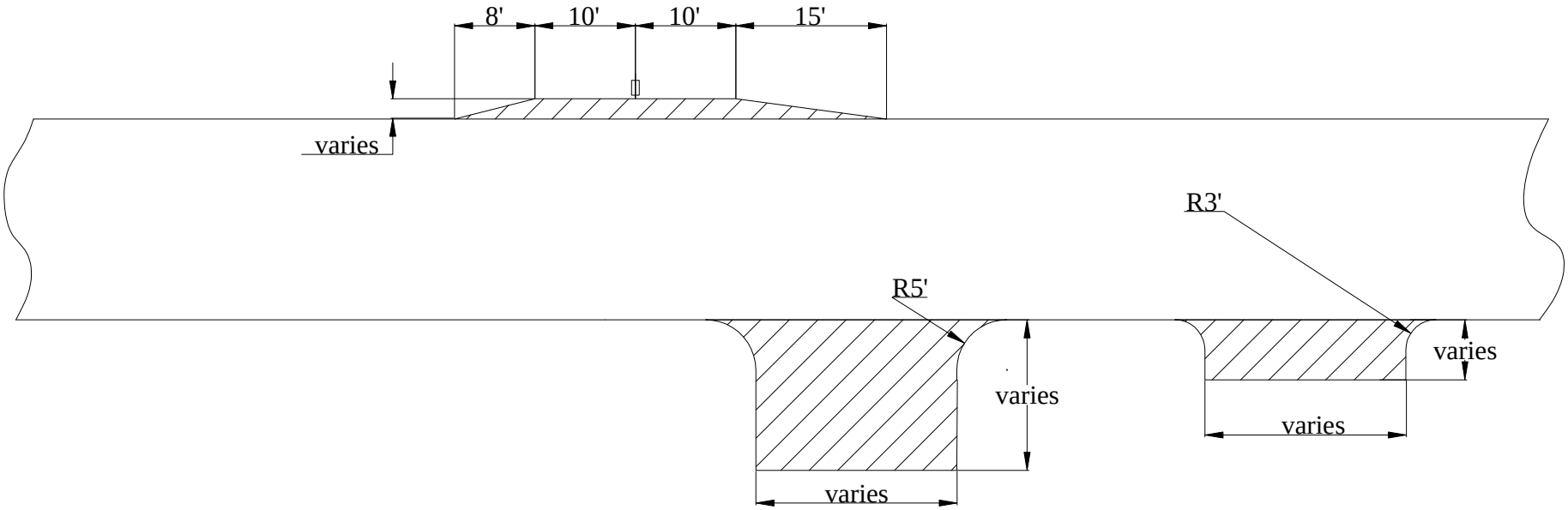

HOUSE FIELD

Notes: 1. Dimensions are approximate and may be adjusted in the field by the Engineer

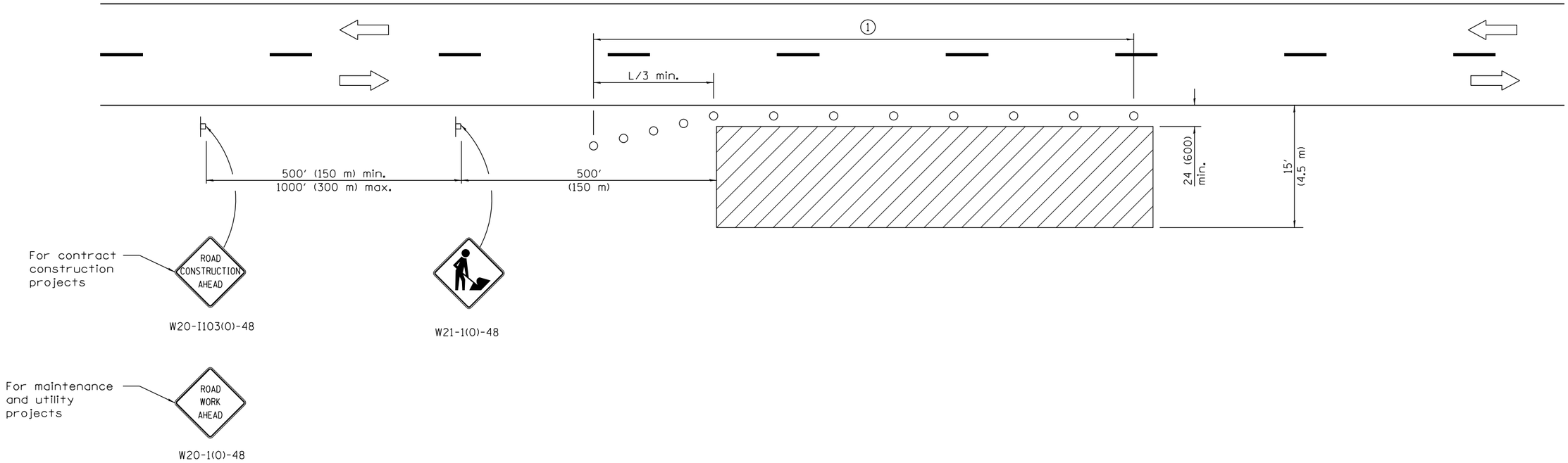

TYPICAL APPLICATIONS

Utility operations
Culvert extensions
Side slope changes
Guardrail installation and maintenance
Delineator installation
Landscaping operations
Shoulder repair
Sign installation and maintenance

SYMBOLS

Work area

Sign

Cone, drum or barricade

① When the work operation exceeds one hour, cones, drums or barricades shall be placed at 25′ (8 m) centers for L/3 distance, and at 50′ (15 m) centers through the remainder of the work area.

GENERAL NOTES

This Standard is used where any vehicles, equipment, workers or their activities will encroach in the area 15′ (4.5 m) to 24 (600) from the edge of pavement.

Calculate L as follows:

SPEED LIMIT	FORMULAS English	FORMULAS (Metric)
40 mph (70 km/h) or less:	$L=\frac{WS^2}{60}$	$L=\frac{WS^2}{150}$
45 mph (80 km/h) or greater:	L=(W)(S)	L=0.65(W)(S)

W = Width of offset in feet (meters).

S = Normal posted speed mph (km/h).

All dimensions are in inches (millimeters) unless otherwise shown.

Illinois Department of Transportation

APPROVED January 1, 2014
ENGINEER OF SAFETY ENGINEERING

APPROVED January 1, 2014
ENGINEER OF DESIGN AND ENVIRONMENT

ISSUED 1-1-97

DATE	REVISIONS
1-1-14	Revised workers sign
	number to agree with
	current MUTCD.
1-1-13	Omitted text 'WORKERS'
	sign.

OFF–RD OPERATIONS, 2L, 2W, 15′ (4.5 m) TO 24″ (600 mm) FROM PAVEMENT EDGE

STANDARD 701006–05

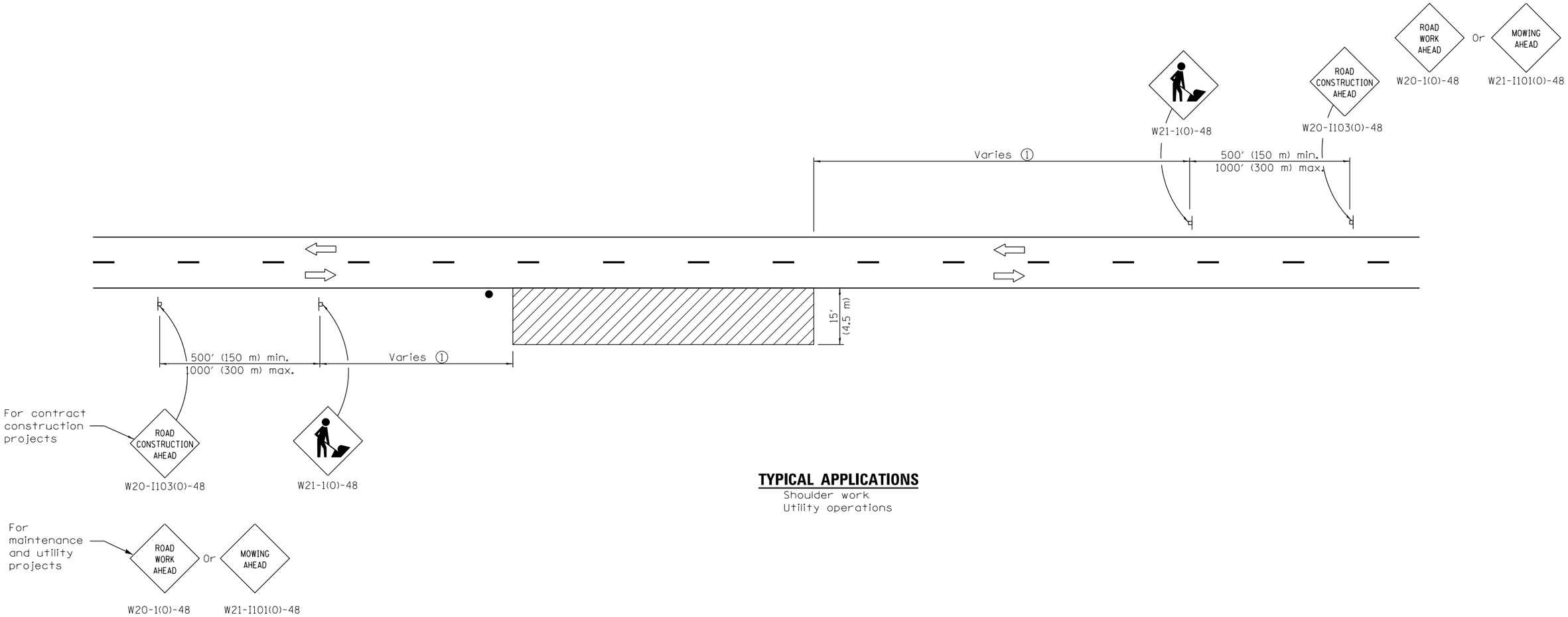

TYPICAL APPLICATIONS

Shoulder work
Utility operations

① Minimum distance is 200′ (60 m). Maximum distance to be determined by the Engineer but should not exceed ½ the length required for one normal working day's operation, or 4 miles (6.4 km) whichever is less.

GENERAL NOTES

This Standard is used where at any time, any vehicle, equipment. workers or their activities require an intermittent or continuous moving operation on the shoulder, where the average speed is 1 mph (2 km/h) or less.

When the work operation does not exceed 60 minutes, traffic control may be according to Standard 701301.

All dimensions are in inches (millimeters) unless otherwise shown.

SYMBOLS

Work area

Sign

Flagger with traffic control sign when required

Illinois Department of Transportation

APPROVED January 1, 2014
ENGINEER OF SAFETY ENGINEERING

APPROVED January 1, 2014
ENGINEER OF DESIGN AND ENVIRONMENT

ISSUED 1-1-97

DATE	REVISIONS
1-1-14	Revised workers sign
	number to agree with
	current MUTCD.
1-1-13	Omitted text 'WORKERS'
	sign.

OFF–RD MOVING OPERATIONS, 2L, 2W, DAY ONLY

STANDARD 701011–04

① Cones at 25′ (8 m) centers for 250′ (75 m). Additional cones may be placed at 50′ (15 m) centers. When drums or barricades are used, the interval between devices may be doubled.

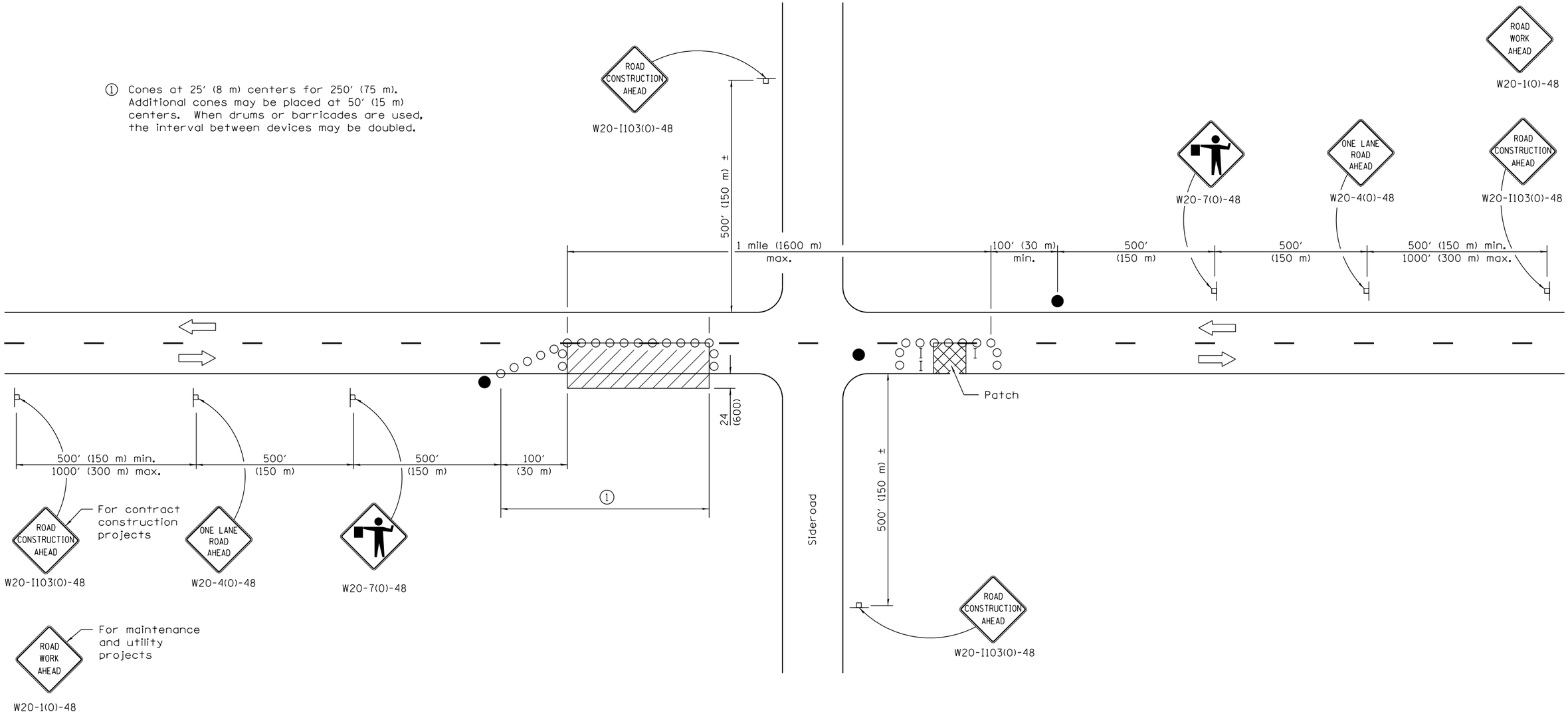

SYMBOLS

- Work area
- Sign
- Barricade or drum
- Cone, drum or barricade
- Flagger with traffic control sign

TYPICAL APPLICATIONS

Isolated patching
Utility operations
Storm sewer
Culverts
Cable placement

GENERAL NOTES

This Standard is used where at any time, any vehicles, equipment, workers or their activities will encroach in the area between the center line and a line 24 (600) outside the edge of pavement for daylight operation.

When the distance between successive work areas exceeds 2000′ (600 m), additional warning signs, flaggers, and taper shall be placed as shown.

All dimensions are in inches (millimeters) unless otherwise shown.

Illinois Department of Transportation

APPROVED January 1, 2011
ENGINEER OF SAFETY ENGINEERING

APPROVED January 1, 2011
ENGINEER OF DESIGN AND ENVIRONMENT

ISSUED 1-1-97

DATE	REVISIONS
1-1-11	Revised flagger sign.
1-1-09	Switched units to
	English (metric).
	Corrected sign No.'s.

LANE CLOSURE, 2L, 2W, DAY ONLY, FOR SPEEDS ≥ 45 MPH

STANDARD 701201–04

For any operation that encroaches in the area between the centerline and a line 24 (600) outside the edge of the pavement for a period of less than 15 minutes.

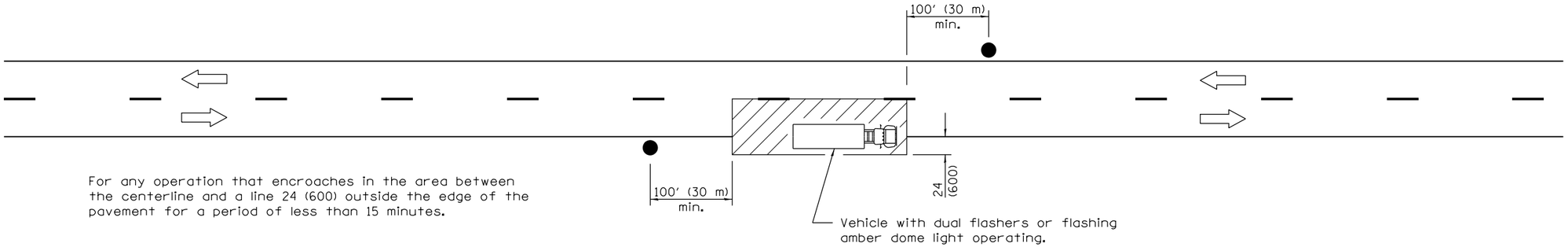

For any operation that is more than 24 (600) outside the edge of the pavement for a period of less than 60 minutes.

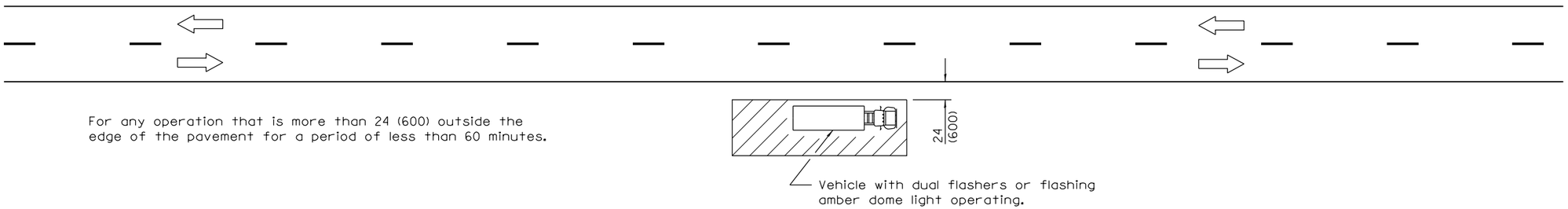

For any operation that encroaches in the area between the centerline and a line 24 (600) outside the edge of the pavement for a period in excess of 15 minutes but less than 60 minutes.

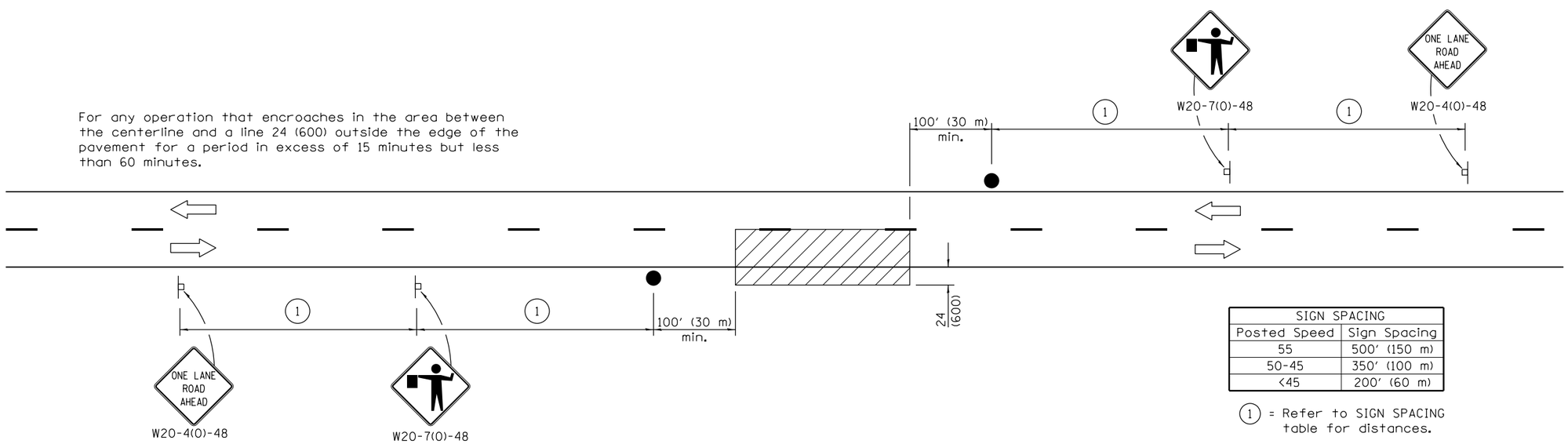

SIGN SPACING	
Posted Speed	Sign Spacing
55	500' (150 m)
50-45	350' (100 m)
<45	200' (60 m)

(1) = Refer to SIGN SPACING table for distances.

All dimensions are in inches (millimeters) unless otherwise shown.

TYPICAL APPLICATIONS

Marking patches
Field survey
String line
Utility operations
Cleaning up debris on pavement

SYMBOLS

Work area

Sign on portable or permanent support

Flagger with traffic control sign

Illinois Department of Transportation

APPROVED January 1, 2011
ENGINEER OF SAFETY ENGINEERING

APPROVED January 1, 2011
ENGINEER OF DESIGN AND ENVIRONMENT

ISSUED 1-1-97

DATE	REVISIONS
1-1-11	Revised flagger sign.
1-1-09	Switched units to
	English (metric).

LANE CLOSURE, 2L, 2W, SHORT TIME OPERATIONS

STANDARD 701301–04

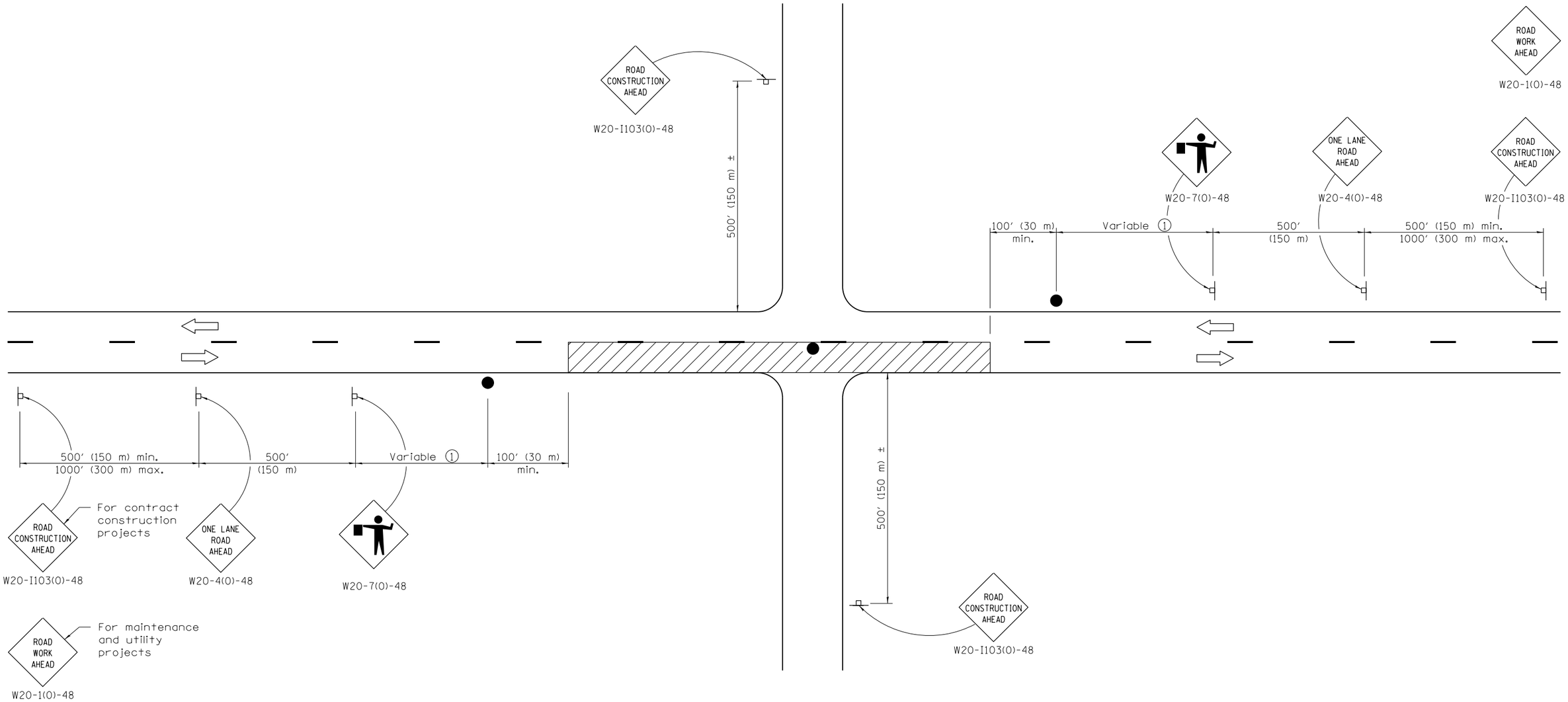

TYPICAL APPLICATIONS

Bituminous resurfacing
Milling operations
Utility operations
Shoulder operations

① Minimum distance is 200′ (60 m). Maximum distance to be determined by the Engineer but should not exceed ½ the length required for one normal working day's operation or 2 miles (3200 m), whichever is less.

SYMBOLS

Work area

Sign on portable or permanent support

Flagger with traffic control sign

GENERAL NOTES

This Standard is used where at any time, any vehicle, equipment, workers or their activities require an intermittent or continuous moving operation on the pavement where the average speed of movement is greater than 1 mph (2 km/h) and less than 4 mph (6 km/h).

When the operation does not exceed 60 minutes, traffic control may be according to Standard 701301.

All dimensions are in inches (millimeters) unless otherwise shown.

Illinois Department of Transportation

APPROVED January 1, 2011
ENGINEER OF SAFETY ENGINEERING

APPROVED January 1, 2011
ENGINEER OF DESIGN AND ENVIRONMENT

ISSUED 1-1-97

DATE	REVISIONS
1-1-11	Revised flagger sign.
1-1-09	Switched units to
	English (metric).
	Corrected sign No.'s.

LANE CLOSURE, 2L, 2W, SLOW MOVING OPERATIONS DAY ONLY, FOR SPEEDS ≥ 45 MPH

STANDARD 701306–03

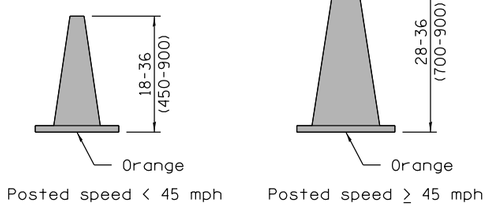

CONE FOR DAYTIME

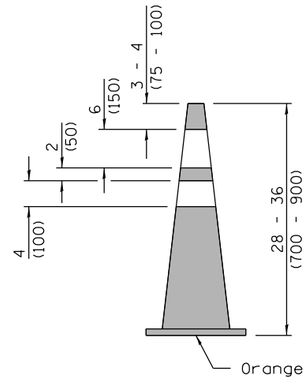

REFLECTORIZED CONE FOR NIGHTTIME

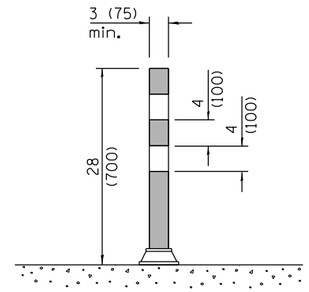

FLEXIBLE DELINEATOR

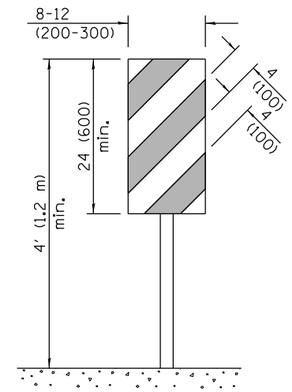

VERTICAL PANEL
POST MOUNTED

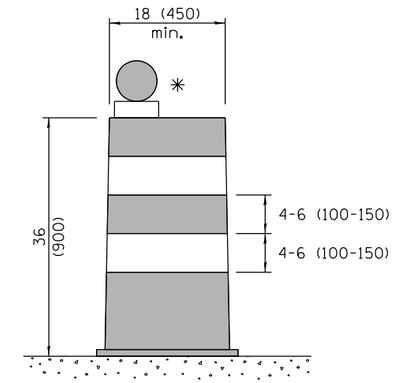

DRUM

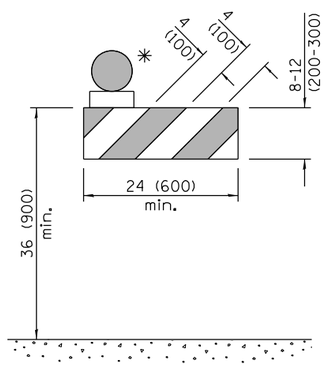

TYPE I BARRICADE

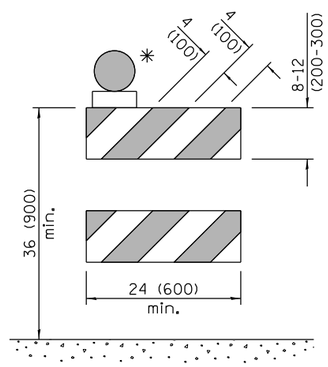

TYPE II BARRICADE

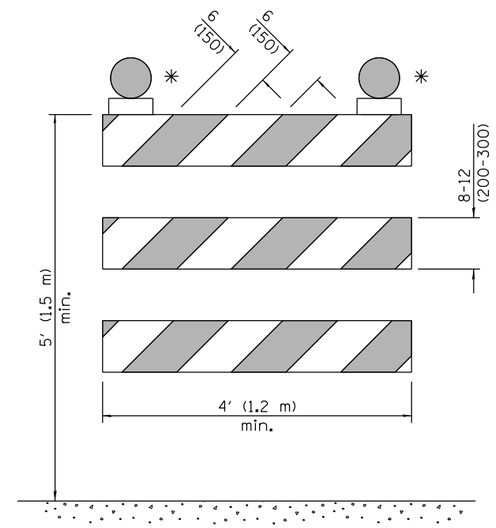

TYPE III BARRICADE

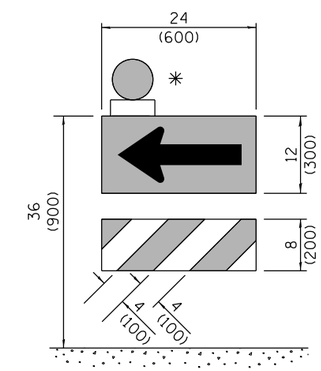

DIRECTION INDICATOR BARRICADE

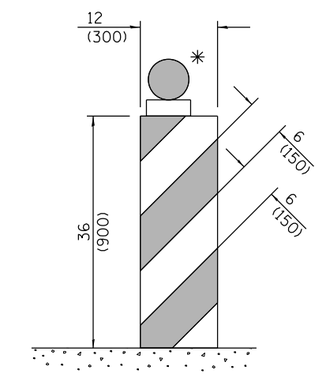

VERTICAL BARRICADE

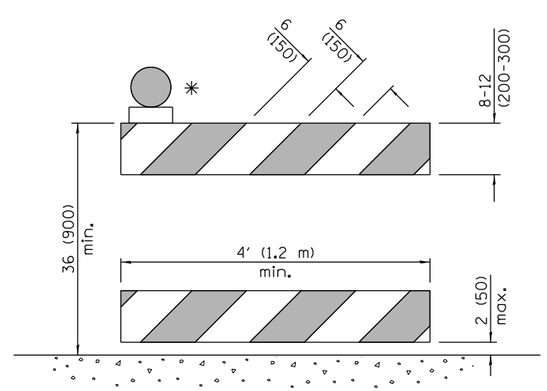

DETECTABLE PEDESTRIAN CHANNELIZING BARRICADE

✳ Warning lights (if required)

GENERAL NOTES

All heights shown shall be measured above the pavement surface.

All dimensions are in inches (millimeters) unless otherwise shown.

Illinois Department of Transportation

APPROVED April 1, 2016
ENGINEER OF OPERATIONS
APPROVED April 1, 2016
ENGINEER OF DESIGN AND ENVIRONMENT

ISSUED 1-1-97

DATE	REVISIONS
4-1-16	Add dim's to barricades. Rev.
	note for post mnt. signs.
	Rev. cone dtls. Add W12-I103.
1-1-15	Revised two sign numbers on
	sheet 2. Added note reg.
	PHOTO ENFORCED plaque.

TRAFFIC CONTROL DEVICES

(Sheet 1 of 3)

STANDARD 701901-05

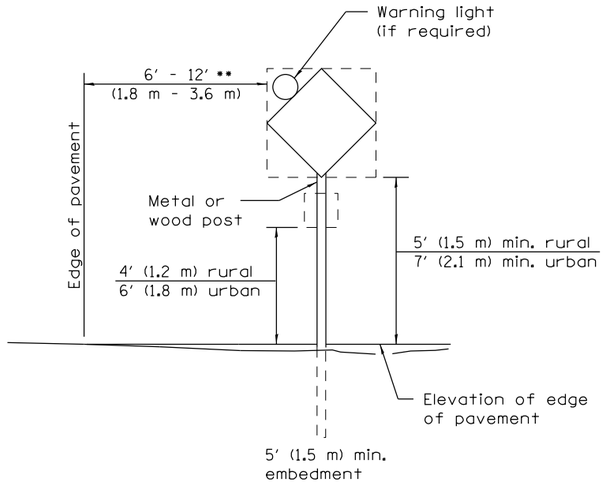

POST MOUNTED SIGNS

•• When curb or paved shoulder are present this dimension shall be 24 (600) to the face of curb or 6′ (1.8 m) to the outside edge of the paved shoulder.

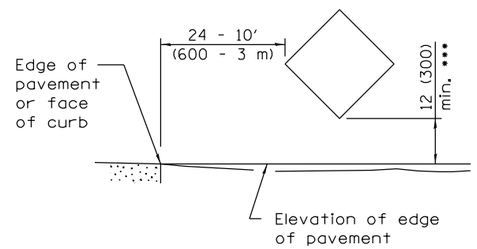

SIGNS ON TEMPORARY SUPPORTS

••• When work operations exceed four days, this dimension shall be 5′ (1.5 m) min. If located behind other devices, the height shall be sufficient to be seen completely above the devices.

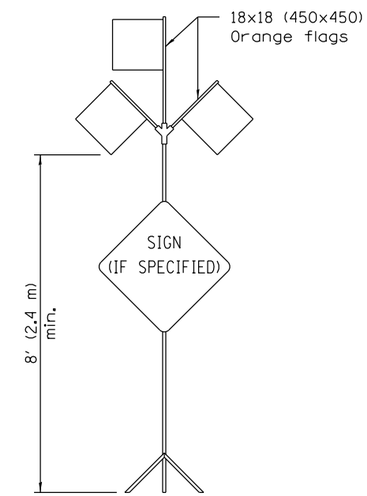

HIGH LEVEL WARNING DEVICE

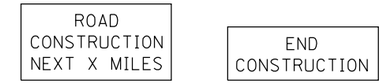

G20-I104(0)-6036 G20-I105(0)-6024

This signing is required for all projects 2 miles (3200 m) or more in length.

ROAD CONSTRUCTION NEXT X MILES sign shall be placed 500′ (150 m) in advance of project limits.

END CONSTRUCTION sign shall be erected at the end of the job unless another job is within 2 miles (3200 m).

Dual sign displays shall be utilized on multi-lane highways.

WORK LIMIT SIGNING

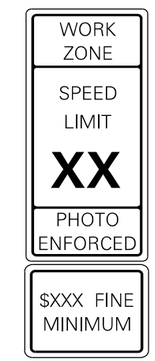

W21-I115(0)-3618

R2-1-3648

R10-I108p-3618 ••••

R2-I106p-3618

Sign assembly as shown on Standards or as allowed by District Operations.

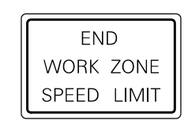

G20-I103(0)-6036

This sign shall be used when the above sign assembly is used.

HIGHWAY CONSTRUCTION SPEED ZONE SIGNS

•••• R10-I108p shall only be used along roadways under the juristiction of the State.

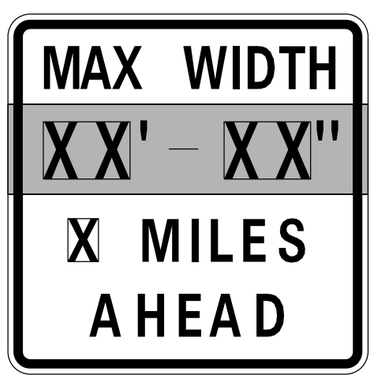

W12-I103-4848

WIDTH RESTRICTION SIGN

XX′-XX″ width and X miles are variable.

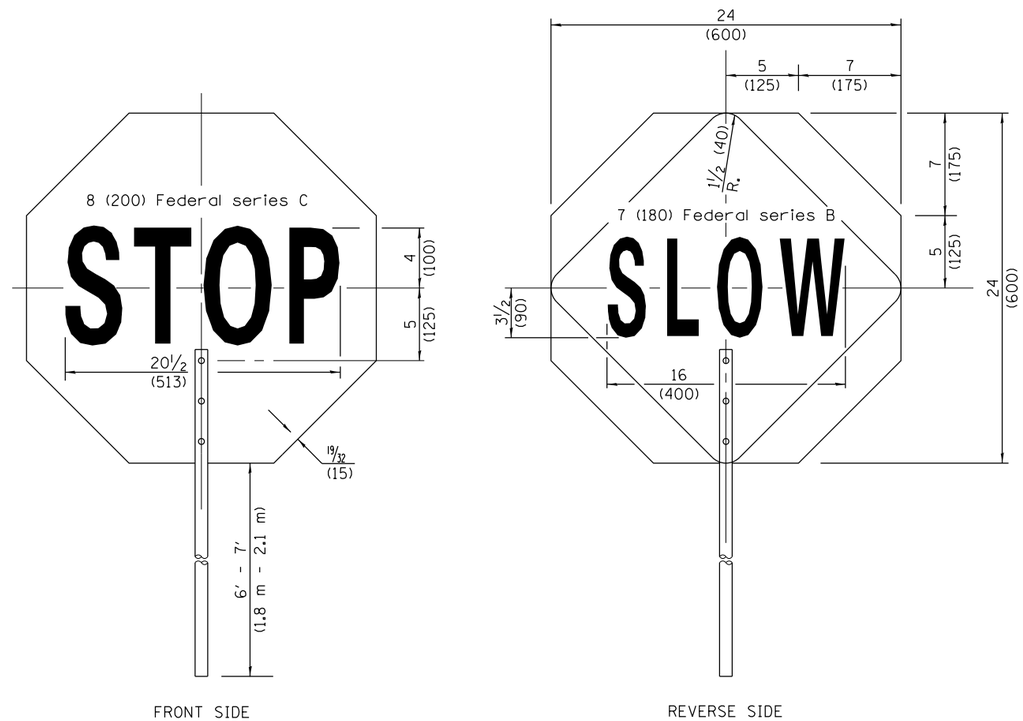

FLAGGER TRAFFIC CONTROL SIGN

Illinois Department of Transportation

APPROVED April 1, 2016
ENGINEER OF OPERATIONS

APPROVED April 1, 2016
ENGINEER OF DESIGN AND ENVIRONMENT

ISSUED 1-1-97

TRAFFIC CONTROL DEVICES

(Sheet 2 of 3)

STANDARD 701901–05

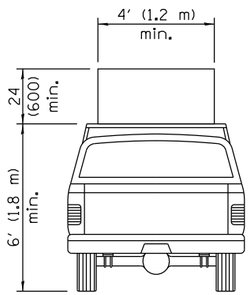

TYPE A ROOF MOUNTED

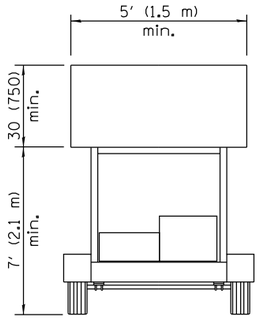

TYPE B ROOF OR TRAILER MOUNTED

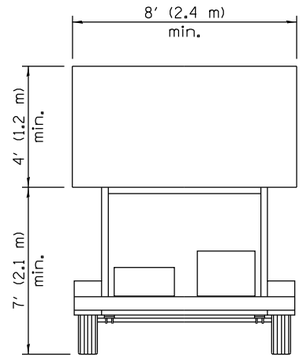

TYPE C TRAILER MOUNTED

ARROW BOARDS

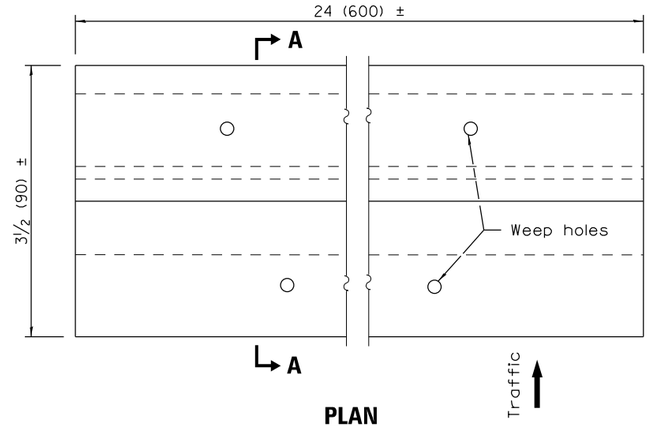

PLAN

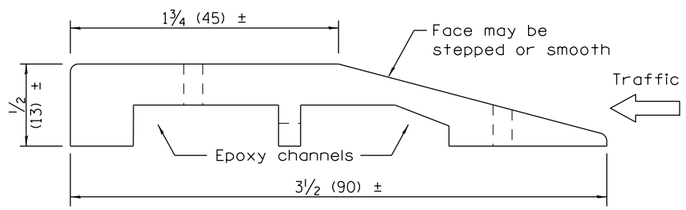

SECTION A–A

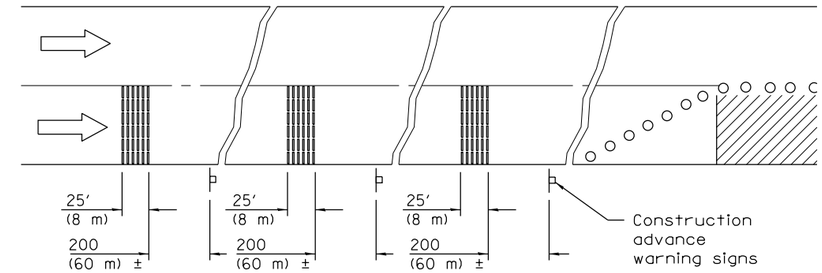

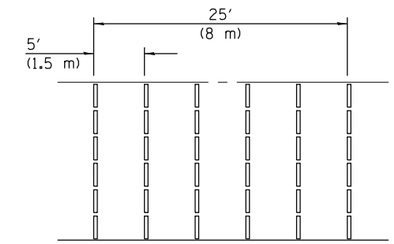

TYPICAL INSTALLATION

TEMPORARY RUMBLE STRIPS

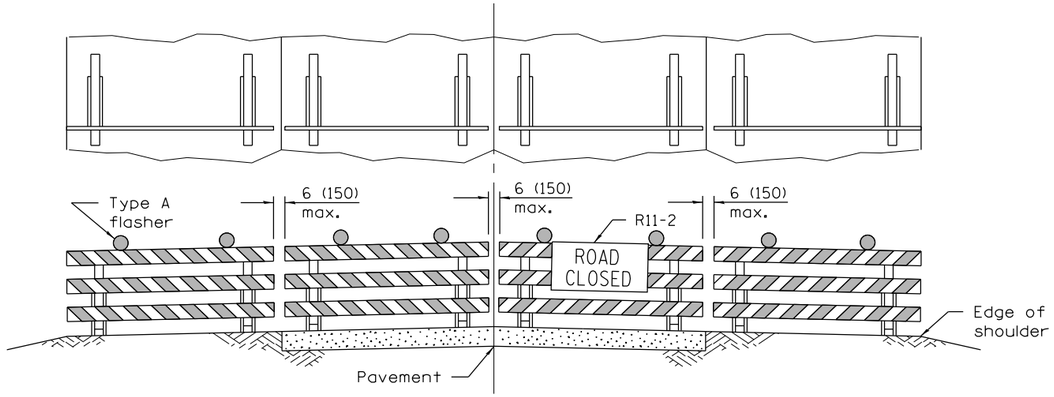

ROAD CLOSED TO ALL TRAFFIC

Reflectorized striping may be omitted on the back side of the barricades. If a Type III barricade with an attached sign panel which meets NCHRP 350 is not available, the sign may be mounted on an NCHRP 350 temporary sign support directly in front of the barricade.

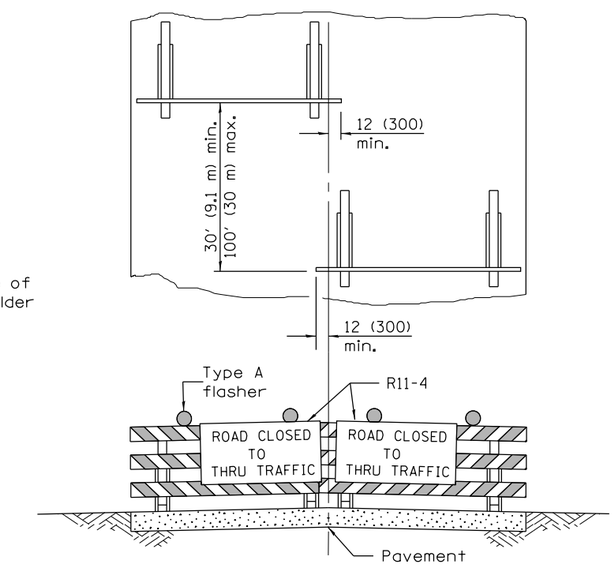

ROAD CLOSED TO THRU TRAFFIC

Reflectorized striping shall appear on both sides of the barricades. If a Type III barricade with an attached sign panel which meets NCHRP 350 is not available, the signs may be mounted on NCHRP 350 temporary sign supports directly in front of the barricade.

TYPICAL APPLICATIONS OF TYPE III BARRICADES CLOSING A ROAD

Illinois Department of Transportation

APPROVED April 1, 2016
ENGINEER OF OPERATIONS

APPROVED April 1, 2016
ENGINEER OF DESIGN AND ENVIRONMENT

ISSUED 1-1-97

TRAFFIC CONTROL DEVICES

(Sheet 3 of 3)

STANDARD 701901–05

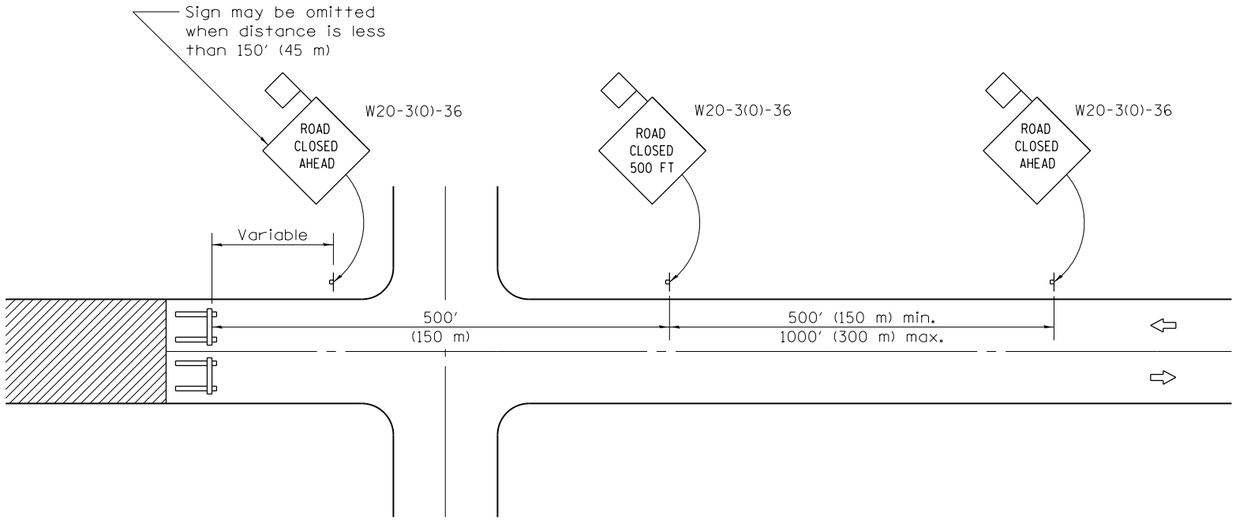

CONDITION I

When distance from closure to crossroad is less than 1500′ (450 m)

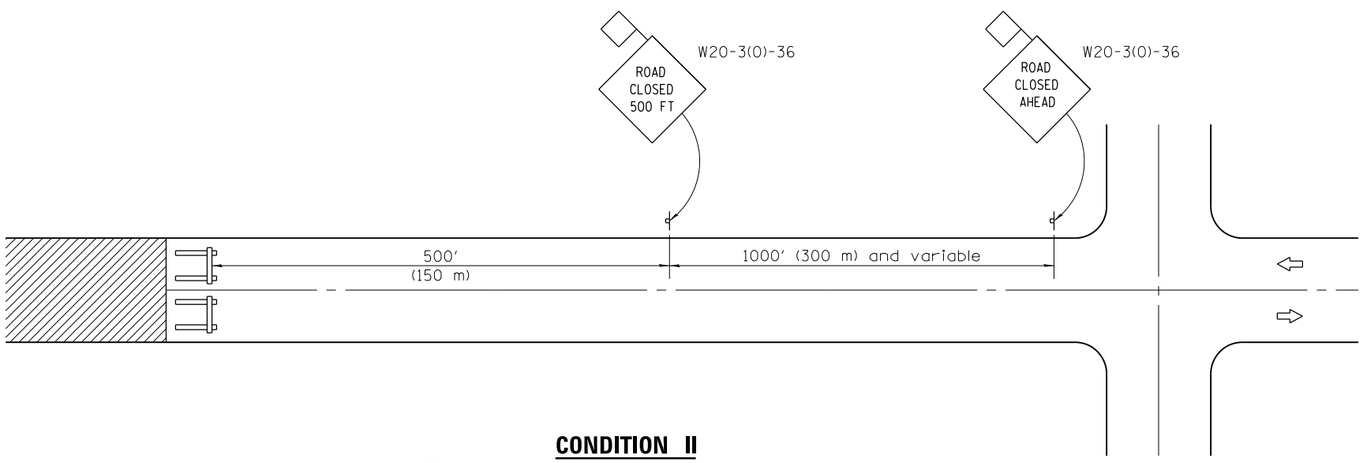

CONDITION II

When distance from closure to crossroad is greater than 1500′ (450 m)

SYMBOLS

Work area

Type III Barricade

Sign with 18x18 (450x450) min. orange flag attached

GENERAL NOTES

Type III Barricades and R11-2-4830 signs shall be positioned as shown in "Road Closed To All Traffic" detail on Highway Standard 701901.

Two Type A Low Intensity Flashing Lights shall be used on each approach in advance of the work area during hours of darkness. One light shall be installed above the barricades and the other above the first advance warning sign.

All warning signs shall have minimum dimensions of 36 x 36 (900 x 900) and have a black legend on an orange reflectorized background.

When fluorescent signs are used, orange flags are not required.

Longitudinal dimensions may be adjusted to fit field conditions.

When the distance between the barricade and the intersection is between 1500′ (450 m) and 2000′ (600 m), the advance sign shall be placed at the intersection. When the distance between the barricade and the intersection is over 2000′ (600 m), an additional sign shall be placed at the intersection. The additional sign shall give the distance to the barricade in miles or fractions of a mile.

All dimensions are in inches (millimeters) unless otherwise shown.

Illinois Department of Transportation

APPROVED January 1, 2012
ENGINEER OF LOCAL ROADS AND STREETS

APPROVED January 1, 2012
ENGINEER OF DESIGN AND ENVIRONMENT

ISSUED 1-1-97

DATE	REVISIONS
1-1-12	Omitted two notes from
	GENERAL NOTES.
1-1-09	Switched units to
	English (metric).

TYPICAL APPLICATION OF TRAFFIC CONTROL DEVICES FOR CONSTRUCTION ON RURAL LOCAL HIGHWAYS

STANDARD B.L.R. 21–9

Tazewell County Prevailing Wage for July 2015

(See explanation of column headings at bottom of wages)

Trade Name	RG	TYP	C	Base	FRMAN	M-F>8	OSA	OSH	H/W	Pensn	Vac	Trng
ASBESTOS ABT-GEN	NW	BLD		26.700	28.200	1.5	1.5	2.0	7.700	16.21	0.000	0.800
ASBESTOS ABT-GEN	NW	HWY		29.910	31.410	1.5	1.5	2.0	7.700	17.47	0.000	0.800
ASBESTOS ABT-GEN	SE	BLD		27.150	27.900	1.5	1.5	2.0	8.500	13.25	0.000	0.800
ASBESTOS ABT-MEC		BLD		32.510	35.010	1.5	1.5	2.0	11.47	10.96	0.000	0.720
BOILERMAKER		BLD		38.000	41.000	2.0	2.0	2.0	7.070	15.99	0.000	0.400
BRICK MASON		BLD		32.380	33.880	1.5	1.5	2.0	8.600	9.870	0.000	0.590
CARPENTER		BLD		30.880	33.130	1.5	1.5	2.0	8.000	15.71	0.000	0.520
CARPENTER		HWY		32.700	34.950	1.5	1.5	2.0	8.000	15.81	0.000	0.520
CEMENT MASON		BLD		28.050	29.800	1.5	1.5	2.0	7.500	15.65	0.000	0.500
CEMENT MASON		HWY		29.280	30.780	1.5	1.5	2.0	7.500	16.02	0.000	0.500
CERAMIC TILE FNSHER		BLD		29.890	0.000	1.5	1.5	2.0	8.600	10.05	0.000	0.580
ELECTRIC PWR EQMT OP		ALL		38.300	45.290	1.5	1.5	2.0	6.150	10.73	0.000	0.380
ELECTRIC PWR GRNDMAN		ALL		26.280	45.290	1.5	1.5	2.0	5.790	7.360	0.000	0.260
ELECTRIC PWR LINEMAN		ALL		42.540	45.290	1.5	1.5	2.0	6.280	11.92	0.000	0.430
ELECTRIC PWR TRK DRV		ALL		27.560	45.290	1.5	1.5	2.0	5.830	7.720	0.000	0.280
ELECTRICIAN		ALL		34.820	37.320	1.5	1.5	2.0	6.500	11.68	0.000	0.800
ELECTRICIAN		BLD		34.820	37.320	1.5	1.5	2.0	6.100	11.43	0.000	0.400
ELECTRONIC SYS TECH		BLD		28.250	30.250	1.5	1.5	2.0	6.350	10.54	0.000	0.400
ELEVATOR CONSTRUCTOR		BLD		41.690	46.900	2.0	2.0	2.0	13.57	14.21	3.340	0.600
GLAZIER		BLD		31.870	33.870	1.5	1.5	1.5	10.25	7.700	0.000	1.250
HT/FROST INSULATOR		BLD		43.350	45.850	1.5	1.5	2.0	11.47	12.36	0.000	0.720
IRON WORKER		BLD		32.190	34.090	0.0	0.0	0.0	9.490	13.91	0.000	0.000
IRON WORKER		HWY		35.980	37.980	0.0	0.0	0.0	9.490	13.91	0.000	0.000
LABORER	NW	BLD		26.100	27.600	1.5	1.5	2.0	7.700	16.21	0.000	0.800
LABORER	NW	HWY		29.160	30.660	1.5	1.5	2.0	7.700	17.47	0.000	0.800
LABORER	SE	BLD		27.150	27.900	1.5	1.5	2.0	8.500	13.25	0.000	0.800
LABORER	SE	HWY		30.490	31.990	1.5	1.5	2.0	8.500	15.30	0.000	0.800
LATHER		BLD		30.880	33.130	1.5	1.5	2.0	8.000	15.71	0.000	0.520
MACHINERY MOVER		HWY		35.980	37.980	0.0	0.0	0.0	9.490	13.91	0.000	0.000
MACHINIST		BLD		45.350	47.850	1.5	1.5	2.0	7.260	8.950	1.850	0.000
MARBLE FINISHERS		BLD		29.890	0.000	1.5	1.5	2.0	8.600	10.05	0.000	0.580
MARBLE MASON		BLD		31.650	32.900	1.5	1.5	2.0	8.600	10.05	0.000	0.580
MILLWRIGHT		BLD		31.060	33.310	1.5	1.5	2.0	8.000	15.87	0.000	0.520
MILLWRIGHT		HWY		33.060	35.310	1.5	1.5	2.0	8.000	15.95	0.000	0.520
OPERATING ENGINEER		BLD	1	37.050	40.050	1.5	1.5	2.0	7.000	17.48	0.000	3.000
OPERATING ENGINEER		BLD	2	34.450	40.050	1.5	1.5	2.0	7.000	17.48	0.000	3.000
OPERATING ENGINEER		BLD	3	30.160	40.050	1.5	1.5	2.0	7.000	17.48	0.000	3.000
OPERATING ENGINEER		HWY	1	38.150	41.150	1.5	1.5	2.0	7.250	18.23	0.000	3.000
OPERATING ENGINEER		HWY	2	35.460	41.150	1.5	1.5	2.0	7.250	18.23	0.000	3.000
OPERATING ENGINEER		HWY	3	31.030	41.150	1.5	1.5	2.0	7.250	18.23	0.000	3.000
PAINTER		ALL		33.650	35.650	1.5	1.5	1.5	10.30	8.200	0.000	1.350
PAINTER SIGNS		BLD		33.920	38.090	1.5	1.5	1.5	2.600	2.710	0.000	0.000
PILEDRIVER		BLD		31.880	34.130	1.5	1.5	2.0	8.000	15.71	0.000	0.520
PILEDRIVER		HWY		33.700	35.950	1.5	1.5	2.0	8.000	15.81	0.000	0.520
PIPEFITTER		BLD		37.400	41.510	1.5	1.5	2.0	7.000	11.63	0.000	1.060
PLASTERER		BLD		28.140	29.770	1.5	1.5	2.0	7.500	15.00	0.000	0.870
PLUMBER		BLD		34.520	37.630	1.5	1.5	2.0	7.000	13.86	0.000	0.950
ROOFER		BLD		30.580	32.110	1.5	1.5	2.0	8.450	7.220	0.000	0.250
SHEETMETAL WORKER		BLD		32.430	34.050	1.5	1.5	2.0	9.120	15.55	0.000	0.780
SIGN HANGER		HWY		35.980	37.980	0.0	0.0	0.0	9.490	13.91	0.000	0.000
SPRINKLER FITTER		BLD		37.120	39.870	1.5	1.5	2.0	8.420	8.500	0.000	0.350
STEEL ERECTOR		HWY		35.980	37.980	0.0	0.0	0.0	9.490	13.91	0.000	0.000
STONE MASON		BLD		32.380	33.880	1.5	1.5	2.0	8.600	9.870	0.000	0.590
~~SURVEY WORKER~~		->NOT IN EFFECT			NW ALL		28.600	30.100	1.5	1.5	2.0	7.700	14.86	0.000	0.800
~~SURVEY WORKER~~		->NOT IN EFFECT			SE ALL		29.060	30.560	1.5	1.5	2.0	8.000	14.06	0.000	0.800

TERRAZZO FINISHER	BLD		29.890	0.000	1.5	1.5	2.0	8.600	10.05	0.000	0.580
TERRAZZO MASON	BLD		31.650	32.900	1.5	1.5	2.0	8.600	10.05	0.000	0.580
TILE MASON	BLD		31.650	32.900	1.5	1.5	2.0	8.600	10.05	0.000	0.580
TRUCK DRIVER	ALL	1	33.000	36.550	1.5	1.5	2.0	11.10	5.230	0.000	0.250
TRUCK DRIVER	ALL	2	33.480	36.550	1.5	1.5	2.0	11.10	5.230	0.000	0.250
TRUCK DRIVER	ALL	3	33.700	36.550	1.5	1.5	2.0	11.10	5.230	0.000	0.250
TRUCK DRIVER	ALL	4	34.010	36.550	1.5	1.5	2.0	11.10	5.230	0.000	0.250
TRUCK DRIVER	ALL	5	34.900	36.550	1.5	1.5	2.0	11.10	5.230	0.000	0.250
TRUCK DRIVER	O&C	1	27.280	30.220	1.5	1.5	2.0	11.40	5.440	0.000	0.250
TRUCK DRIVER	O&C	2	27.680	30.220	1.5	1.5	2.0	11.40	5.440	0.000	0.250
TRUCK DRIVER	O&C	3	27.860	30.220	1.5	1.5	2.0	11.40	5.440	0.000	0.250
TRUCK DRIVER	O&C	4	28.110	30.220	1.5	1.5	2.0	11.40	5.440	0.000	0.250
TRUCK DRIVER	O&C	5	28.850	30.220	1.5	1.5	2.0	11.40	5.440	0.000	0.250
TUCKPOINTER	BLD		32.380	33.880	1.5	1.5	2.0	8.600	9.870	0.000	0.590

Legend: RG (Region)
TYP (Trade Type - All,Highway,Building,Floating,Oil & Chip,Rivers)
C (Class)
Base (Base Wage Rate)
FRMAN (Foreman Rate)
M-F>8 (OT required for any hour greater than 8 worked each day, Mon through Fri.
OSA (Overtime (OT) is required for every hour worked on Saturday)
OSH (Overtime is required for every hour worked on Sunday and Holidays)
H/W (Health & Welfare Insurance)
Pensn (Pension)
Vac (Vacation)
Trng (Training)

Explanations

TAZEWELL COUNTY

ASBESTOS - See Laborers

CARPENTERS (NORTH) - That part of the county North including the towns of Marquette Hts., Morton, Creve Coeur and Deer Creek.

LABORERS (NORTHWEST) - The area bounded by the old city limits of East Peoria.

MILLWRIGHTS - See Carpenters
PILEDRIVERS - See Carpenters

The following list is considered as those days for which holiday rates of wages for work performed apply: New Years Day, Memorial Day, Fourth of July, Labor Day, Thanksgiving Day, Christmas Day and Veterans Day in some classifications/counties. Generally, any of these holidays which fall on a Sunday is celebrated on the following Monday. This then makes work performed on that Monday payable at the appropriate overtime rate for holiday pay. Common practice in a given local may alter certain days of celebration. If in doubt, please check with IDOL.

Oil and chip resealing (O&C) means the application of road oils and liquid asphalt to coat an existing road surface, followed by application of aggregate chips or gravel to coated surface, and subsequent rolling of material to seal the surface.

EXPLANATION OF CLASSES

ASBESTOS - GENERAL - removal of asbestos material/mold and hazardous materials from any place in a building, including mechanical systems where those mechanical systems are to be removed. This includes the removal of asbestos materials/mold and hazardous materials from ductwork or pipes in a building when the building is to be demolished

at the time or at some close future date.

ASBESTOS - MECHANICAL - Removal of asbestos material from mechanical systems, such as pipes, ducts, and boilers, where the mechanical systems are to remain.

CERAMIC TILE FINISHER, MARBLE FINISHER, TERRAZZO FINISHER

Assisting, helping or supporting the tile, marble and terrazzo mechanic by performing their historic and traditional work assignments required to complete the proper installation of the work covered by said crafts. The term "Ceramic" is used for naming the classification only and is in no way a limitation of the product handled. Ceramic takes into consideration most hard tiles.

ELECTRONIC SYSTEMS TECHNICIAN

Installation, service and maintenance of low-voltage systems which utilizes the transmission and/or transference of voice, sound, vision, or digital for commercial, education, security and entertainment purposes for the following: TV monitoring and surveillance, background/foreground music, intercom and telephone interconnect, field programming, inventory control systems, microwave transmission, multi-media, multiplex, radio page, school, intercom and sound burglar alarms and low voltage master clock systems.

Excluded from this classification are energy management systems, life safety systems, supervisory controls and data acquisition systems not intrinsic with the above listed systems, fire alarm systems, nurse call systems and raceways exceeding fifteen feet in length.

SURVEY WORKER - Operated survey equipment including data collectors, G.P.S. and robotic instruments, as well as conventional levels and transits.

TRUCK DRIVER - BUILDING, HEAVY AND HIGHWAY CONSTRUCTION
Class 1. Drivers on 2 axle trucks hauling less than 9 ton. Air compressor and welding machines and brooms, including those pulled by separate units, truck driver helpers, warehouse employees, mechanic helpers, greasers and tiremen, pickup trucks when hauling materials, tools, or workers to and from and on-the-job site, and fork lifts up to 6,000 lb. capacity.

Class 2. Two or three axle trucks hauling more than 9 ton but hauling less than 16 ton. A-frame winch trucks, hydrolift trucks, vactor trucks or similar equipment when used for transportation purposes. Fork lifts over 6,000 lb. capacity, winch trucks, four axle combination units, and ticket writers.

Class 3. Two, three or four axle trucks hauling 16 ton or more. Drivers on water pulls, articulated dump trucks, mechanics and working forepersons, and dispatchers. Five axle or more combination units.

Class 4. Low Boy and Oil Distributors.

Class 5. Drivers who require special protective clothing while employed on hazardous waste work.

TRUCK DRIVER - OIL AND CHIP RESEALING ONLY.

This shall encompass laborers, workers and mechanics who drive contractor or subcontractor owned, leased, or hired pickup, dump, service, or oil distributor trucks. The work includes transporting materials and equipment (including but not limited to, oils, aggregate

supplies, parts, machinery and tools) to or from the job site; distributing oil or liquid asphalt and aggregate; stock piling material when in connection with the actual oil and chip contract. The Truck Driver (Oil & Chip Resealing) wage classification does not include supplier delivered materials.

OPERATING ENGINEERS - BUILDING

Class 1. Cranes; Overhead Cranes; Gradall; All Cherry Pickers; Mechanics; Central Concrete Mixing Plant Operator; Road Pavers (27E - Dual Drum - Tri Batchers); Blacktop Plant Operators and Plant Engineers; 3 Drum Hoist; Derricks; Hydro Cranes; Shovels; Skimmer Scoops; Koehring Scooper; Drag Lines; Backhoe; Derrick Boats; Pile Drivers and Skid Rigs; Clamshells; Locomotive Cranes; Dredge (all types) Motor Patrol; Power Blades - Dumore - Elevating and similar types; Tower Cranes (Crawler-Mobile) and Stationary; Crane-type Backfiller; Drott Yumbo and similar types considered as Cranes; Caisson Rigs; Dozer; Tournadozer; Work Boats; Ross Carrier; Helicopter; Tournapulls - all and similar types; Scoops (all sizes); Pushcats; Endloaders (all types); Asphalt Surfacing Machine; Slip Form Paver; Rock Crusher; Heavy Equipment Greaser; CMI, CMI Belt Placer, Auto Grade & 3 Track and similar types; Side Booms; Multiple Unit Earth Movers; Creter Crane; Trench Machine; Pump-crete-Belt Crete-Squeeze Cretes-Screw-type Pumps and Gypsum; Bulker & Pump - Operator will clean; Formless Finishing Machine; Flaherty Spreader or similar types; Screed Man on Laydown Machine; Wheel Tractors (industrial or Farm-type w/Dozer-Hoe-Endloader or other attachments); F.W.D. & Similar Types; Vermeer Concrete Saw.

Class 2. Dinkeys; Power Launches; PH One-pass Soil Cement Machine (and similar types); Pugmill with Pump; Backfillers; Euclid Loader; Forklifts; Jeeps w/Ditching Machine or other attachments; Tuneluger; Automatic Cement and Gravel Batching Plants; Mobile Drills (Soil Testing) and similar types; Gurries and Similar Types; (1) and (2) Drum Hoists (Buck Hoist and Similar Types); Chicago Boom; Boring Machine & Pipe Jacking Machine; Hydro Boom; Dewatering System; Straw Blower; Hydro Seeder; Assistant Heavy Equipment Greaser on Spread; Tractors (Track type) without Power Unit pulling Rollers; Rollers on Asphalt -- Brick Macadem; Concrete Breakers; Concrete Spreaders; Mule Pulling Rollers; Center Stripper; Cement Finishing Machines & CMI Texture & Reel Curing Machines; Cement Finishing Machine; Barber Green or similar loaders; Vibro Tamper (All similar types) Self-propelled; Winch or Boom Truck; Mechanical Bull Floats; Mixers over 3 Bag to 27E; Tractor pulling Power Blade or Elevating Grader; Porter Rex Rail; Clary Screed; Truck Type Hoptoe Oilers; Fireman; Spray Machine on Paving; Curb Machines; Truck Crane Oilers; Oil Distributor; Truck-Mounted Saws.

Class 3. Air Compressor; Power Subgrader; Straight Tractor; Trac Air without attachments; Herman Nelson Heater, Dravo, Warner, Silent Glo, and similar types; Roller: Five (5) Ton and under on Earth or Gravel; Form Grader; Crawler Crane & Skid Rig Oilers; Freight Elevators - permanently installed; Pump; Light Plant; Generator; Conveyor (1) or (2) - Operator will clean; Welding Machine; Mixer (3) Bag and Under (Standard Capacity with skip); Bulk Cement Plant; Oiler on Central Concrete Mixing Plant.

OPERATING ENGINEERS - HEAVY AND HIGHWAY CONSTRUCTION

CLASS 1. Cranes; Hydro Cranes; Shovels; Crane Type Backfiller; Tower, Mobile, Crawler, & Stationary Cranes; Derricks; Hoists (3 Drum); Draglines; Drott Yumbo & Similar Types considered as Cranes; 360 Degree Swing Excavator (Shears, Grapples, Movacs, etc.); Back Hoe; Derrick Boats; Pile Driver and Skid Rigs; Clam Shell; Locomotive -

Cranes; Road Pavers - Single Drum - Dual Drum - Tri Batcher; Motor Patrols & Power Blades - Dumore - Elevating & Similar Types; Mechanics; Central Concrete Mixing Plant Operator; Asphalt Batch Plant Operators and Plant Engineers; Gradall; Caisson Rigs; Skimmer Scoop - Koering Scooper; Dredges (all types); Hoptoe; All Cherry Pickers; Work Boat; Ross Carrier; Helicopter; Dozer; Tournadozer; Tournapulls - all and similar types; Operation of Concrete and all Recycle Machines; Multiple Unit Earth Movers; Scoops (all sizes); Pushcats; Endloaders (all types); Asphalt Surfacing Machine; Slip Form Paver; Rock Crusher; Operation of Material Crusher, Screening Plants, and Tunnel Boring Machine; Heavy Equipment Greaser (top greaser on spread); CMI, Auto Grade, CMI Belt Placer & 3 Track and Similar Types; Side Booms; Asphalt Heater & Planer Combination (used to plane streets); Wheel Tractors (with Dozer, Hoe or Endloader Attachments); CAT Earthwork Compactors and Similar Types; Blaw Knox Spreader and Similar Types; Trench Machines; Pump Crete - Belt Crete - Squeeze Crete - Screw Type Pumps and Gypsum (operator will clean); Creter Crane; Operation of Concrete Pump Truck; Formless Finishing Machines; Flaherty Spreader or Similar Types; Screed Man on Laydown Machine; Vermeer Concrete Saw; Operation of Laser Screed; Span Saw; Dredge Leverman; Dredge Engineer; Lull or Similar Type; Hydro-Boom Truck; Operation of Guard Rail Machine; and Starting Engineer on Pipeline or Construction (11 or more pieces) including: Air Compressor (Trailer Mounted), All Forced Air Heaters (regardless of Size), Water Pumps (Greater than 4-1/2" or Total Discharge Over 4-1/2"), Light Plants, Generators (Trailer Mounted - Excluding Decontamination Trailer), Welding Machines (Any Size or Mode of Power), Conveyor, Mixer (any size), Stud Welder, Power Pac, etc, and Ground Heater (Trailer Mounted).

CLASS 2. Bulker & Pump; Power Launches; Boring Machine & Pipe Jacking Machine; Dinkeys; Operation of Carts, Powered Haul Unit for a Boring Machine; P & H One Pass Soil Cement Machines and Similar Types; Wheel Tractors (Industry or Farm Type - Other); Back Fillers; Euclid Loader; Fork Lifts; Jeep w/Ditching Machine or Other Attachments; Tunneluger; Automatic Cement & Gravel Batching Plants; Mobile Drills - Soil Testing and Similar Types; Pugmill with Pump; All (1) and (2) Drum Hoists; Dewatering System; Straw Blower; Hydro-Seeder; Bump Grinders (self-propelled); Assistant Heavy Equipment Greaser; Apsco Spreader; Tractors (Track-Type) without Power Units Pulling Rollers; Rollers on Asphalt - Brick or Macadam; Concrete Breakers; Concrete Spreaders; Cement Strippers; Cement Finishing Machines & CMI Texture & Reel Curing Machines; Vibro-Tampers (All Similar Types Self-Propelled); Mechanical Bull Floats; Self-Propelled Concrete Saws; Truck Mounted Power Saws; Operation of Curb Cutters; Mixers - Over Three (3) Bags; Winch and Boom Trucks; Tractor Pulling Power Blade or Elevating Grader; Porter Rex Rail; Clary Screed; Mule Pulling Rollers; Pugmill without Pump; Barber Greene or Similar Loaders; Track Type Tractor w/Power Unit attached (minimum); Fireman; Spray Machine on Paving; Curb Machines; Paved Ditch Machine; Power Broom; Self-Propelled Sweepers; Self-Propelled Conveyors; Power Subgrader; Oil Distributor; Straight Tractor; Truck Crane Oiler; Truck Type Oilers; Directional Boring Machine; Horizontal Directional Drill; Articulating End Dump Vehicles; Starting Engineer on Pipeline or Construction (6 -10 pieces) including: Air Compressor (Trailer Mounted), All Forced Air Heaters (regardless of Size), Water Pumps (Greater than 4-1/2" or Total Discharge Over 4-1/2"), Light Plants, Generators (Trailer Mounted - Excluding Decontamination Trailer), Welding Machines (Any Size or Mode of Power), Conveyor, Mixer (any size), Stud Welder, Power Pac, etc., and Ground Heater (Trailer Mounted).

CLASS 3. Straight Framed Truck Mounted Vac Unit (separately powered); Trac Air Machine (without attachments); Rollers - Five Ton and Under on Earth and Gravel; Form Graders; Bulk Cement Plant; Oilers; and

Starting Engineer on Pipeline or Construction (3 - 5 pieces) including: Air Compressor (Trailer Mounted), All Forced Air Heaters (regardless of Size), Water Pumps (Greater than 4-1/2" or Total Discharge Over 4-1/2"), Light Plants, Generators (Trailer Mounted - Excluding Decontamination Trailer), Welding Machines (Any Size or Mode of Power), Conveyor, Mixer (any size), Stud Welder, Power Pac, etc., and Ground Heater (Trailer Mounted).

Other Classifications of Work:

For definitions of classifications not otherwise set out, the Department generally has on file such definitions which are available. If a task to be performed is not subject to one of the classifications of pay set out, the Department will upon being contacted state which neighboring county has such a classification and provide such rate, such rate being deemed to exist by reference in this document. If no neighboring county rate applies to the task, the Department shall undertake a special determination, such special determination being then deemed to have existed under this determination. If a project requires these, or any classification not listed, please contact IDOL at 217-782-1710 for wage rates or clarifications.

LANDSCAPING

Landscaping work falls under the existing classifications for laborer, operating engineer and truck driver. The work performed by landscape plantsman and landscape laborer is covered by the existing classification of laborer. The work performed by landscape operators (regardless of equipment used or its size) is covered by the classifications of operating engineer. The work performed by landscape truck drivers (regardless of size of truck driven) is covered by the classifications of truck driver.