# Tazewell County Highway Department

## AUTHORIZATION TO BID FORM

Addenda will be published to our Bid Letting page in the same manner as the plans and specifications. It is the sole responsibility of the plan holders to periodically check the website for plan addenda.

**ALL BIDDERS PLANNING TO PLACE A BID MUST FILL OUT THIS FORM TO BE AUTHORIZED TO BID.**

- This form must be completed, signed and either faxed to (309) 925-5533 or emailed to jsciortino@tazewell.com.
- Failure to submit this completed form will result in the bid not being accepted.
- If an email address is provided a Notice of Addenda will be sent when updates are available.
- Bid results are typically posted by noon the day after the County Board meeting (last Wednesday of each month) when bids are approved.

| | |
|---|---|
| Company Name: | |
| Address: | |
| | |
| Phone: | |
| Fax: | |
| Email: | |
| Bid Letting Date: | |

**Projects Intending to Bid on:**

| Section Number: | Description: |
|---|---|
| | |
| | |
| | |
| | |
| | |

Tazewell County Highway Department
21308 Illinois Route 9
Tremont, IL 61568
p: (309) 925-5532 • f: (309) 925-5533 • jsciortino@tazewell.com

**RETURN WITH BID**

Illinois Department of Transportation

# Local Public Agency Formal Contract Proposal

| PROPOSAL SUBMITTED BY | | |
|---|---|---|
| Contractor's Name | | |
| Street | | P.O. Box |
| City | State | Zip Code |

STATE OF ILLINOIS

COUNTY OF TAZEWELL

MORTON ROAD DISTRICT

(Name of City, Village, Town or Road District)

FOR THE IMPROVEMENT OF

STREET NAME OR ROUTE NO. TR 61B & TR 71A

SECTION NO. 16-14000-01-GM (NON-MFT)

TYPES OF FUNDS TOWNSHIP NON-MFT FUNDS

☒ SPECIFICATIONS (required) ☐ PLANS (required)

---

**For Municipal Projects**

Submitted/Approved/Passed

☐ Mayor ☐ President of Board of Trustees ☐ Municipal Official

Date

**Department of Transportation**

☐ Released for bid based on limited review

Regional Engineer

Date

**For County and Road District Projects**

Submitted/Approved

Highway Commissioner

3/23/2016

Date

Submitted/Approved

Craig Pirk

County Engineer/Superintendent of Highways

03-22-2016

Date

**Note**: All proposal documents, including Proposal Guaranty Checks or Proposal Bid Bonds, should be stapled together to prevent loss when bids are processed.

**RETURN WITH BID**

# NOTICE TO BIDDERS

County TAZEWELL
Local Public Agency MORTON R.D.
Section Number 16-14000-01-GM (N-MFT)
Route TR 61b & TR 71a

Sealed proposals for the improvement described below will be received at the office of TAZEWELL COUNTY ENGINEER, 21308 ILLINOIS ROUTE 9 TREMONT, ILLINOIS 61568 (Address) until 8:00 AM (Time) on April 18, 2016 (Date)

Sealed proposals will be opened and read publicly at the office of TAZEWELL COUNTY ENGINEER 21308 ILLINOIS ROUTE 9 TREMONT, ILLINOIS 61568 (Address) at 8:00 AM (Time) on April 18, 2016 (Date)

DESCRIPTION OF WORK

Name 16-14000-01-GM (N-MFT) Length: 10997.00 feet ( 2.08 miles)
Location TR 61b QUEENWOOD ROAD AND TR 71a BROADWAY ROAD
Proposed Improvement REMOVAL AND CONSTRUCTION OF HOT-MIX ASPHALT AND RELATED WORK.

1. Plans and proposal forms will be available in the office of TAZEWELL COUNTY ENGINEER 21308 ILLINOIS ROUTE 9 TREMONT, ILLINOIS 61568 (Address)

2. ☒ Prequalification
   If checked, the 2 low bidders must file within 24 hours after the letting an "Affidavit of Availability" (Form BC 57), in duplicate, showing all uncompleted contracts awarded to them and all low bids pending award for Federal, State, County, Municipal and private work. One original shall be filed with the Awarding Authority and one original with the IDOT District Office.

3. The Awarding Authority reserves the right to waive technicalities and to reject any or all proposals as provided in BLRS Special Provision for Bidding Requirements and Conditions for Contract Proposals.

4. The following BLR Forms shall be returned by the bidder to the Awarding Authority:
   a. BLR 12200: Local Public Agency Formal Contract Proposal
   b. BLR 12200a Schedule of Prices
   c. BLR 12230: Proposal Bid Bond (if applicable)
   d. BLR 12325: Apprenticeship or Training Program Certification (**do not use for federally funded projects**)
   e. BLR 12326: Affidavit of Illinois Business Office

5. The quantities appearing in the bid schedule are approximate and are prepared for the comparison of bids. Payment to the Contractor will be made only for the actual quantities of work performed and accepted or materials furnished according to the contract. The scheduled quantities of work to be done and materials to be furnished may be increased, decreased or omitted as hereinafter provided.

6. Submission of a bid shall be conclusive assurance and warranty the bidder has examined the plans and understands all requirements for the performance of work. The bidder will be responsible for all errors in the proposal resulting from failure or neglect to conduct an in depth examination. The Awarding Authority will, in no case be responsible for any costs, expenses, losses or changes in anticipated profits resulting from such failure or neglect of the bidder.

7. The bidder shall take no advantage of any error or omission in the proposal and advertised contract.

8. If a special envelope is supplied by the Awarding Authority, each proposal should be submitted in that envelope furnished by the Awarding Agency and the blank spaces on the envelope shall be filled in correctly to clearly indicate its contents. When an envelope other than the special one furnished by the Awarding Authority is used, it shall be marked to clearly indicate its contents. When sent by mail, the sealed proposal shall be addressed to the Awarding Authority at the address and in care of the official in whose office the bids are to be received. All proposals shall be filed prior to the time and at the place specified in the Notice to Bidders. Proposals received after the time specified will be returned to the bidder unopened.

9. Permission will be given to a bidder to withdraw a proposal if the bidder makes the request in writing or in person before the time for opening proposals.

**RETURN WITH BID**

# PROPOSAL

County TAZEWELL
Local Public Agency MORTON R.D.
Section Number 16-14000-01-GM (N-MFT)
Route TR 61b & TR 71a

1. Proposal of _____

for the improvement of the above section by the construction of _____
REMOVAL AND CONSTRUCTION OF HOT-MIX ASPHALT AND RELATED WORK..

a total distance of 10997.00 feet, of which a distance of 10997.00 feet, ( 2.082 miles) are to be improved.

2. The plans for the proposed work are those prepared by TAZEWELL COUNTY HIGHWAY DEPARTMENT and approved by the Department of Transportation on _____

3. The specifications referred to herein are those prepared by the Department of Transportation and designated as "Standard Specifications for Road and Bridge Construction" and the "Supplemental Specifications and Recurring Special Provisions" thereto, adopted and in effect on the date of invitation for bids.

4. The undersigned agrees to accept, as part of the contract, the applicable Special Provisions indicated on the "Check Sheet for Recurring Special Provisions" contained in this proposal.

5. The undersigned agrees to complete the work within N/A working days or by 08/15/2016 unless additional time is granted in accordance with the specifications.

6. A proposal guaranty in the proper amount, as specified in BLRS Special Provision for Bidding Requirements and Conditions for Contract Proposals, will be required. Bid Bonds will be allowed as a proposal guaranty. Accompanying this proposal is either a bid bond if allowed, on Department form BLR 12230 or a proposal guaranty check, complying with the specifications, made payable to:

Morton Township Supervisor, Gene E. Smith _____

The amount of the check is _____ ( _____ ).

7. In the event that one proposal guaranty check is intended to cover two or more proposals, the amount must be equal to the sum of the proposal guaranties, which would be required for each individual proposal. If the proposal guaranty check is placed in another proposal, it will be found in the proposal for: Section Number _____.

8. The successful bidder at the time of execution of the contract will be required to deposit a contract bond for the full amount of the award. When a contract bond is not required, the proposal guaranty check will be held in lieu thereof. If this proposal is accepted and the undersigned fails to execute a contract and contract bond as required, it is hereby agreed that the Bid Bond or check shall be forfeited to the Awarding Authority.

9. Each pay item should have a unit price and a total price. If no total price is shown or if there is a discrepancy between the product of the unit price multiplied by the quantity, the unit price shall govern. If a unit price is omitted, the total price will be divided by the quantity in order to establish a unit price.

10. A bid will be declared unacceptable if neither a unit price nor a total price is shown.

11. The undersigned submits herewith the schedule of prices on BLR 12200a covering the work to be performed under this contract.

12. The undersigned further agrees that if awarded the contract for the sections contained in the combinations on BLR 12200a, the work shall be in accordance with the requirements of each individual proposal for the multiple bid specified in the Schedule for Multiple Bids below.

RETURN WITH BID

Illinois Department of Transportation

# SCHEDULE OF PRICES

County TAZEWELL
Local Public Agency MORTON R.D.
Section 16-14000-01-GM (N-MFT)
Route TR 61b & TR 71a

**Schedule for Multiple Bids**

| Combination Letter | Sections Included in Combinations | Total |
|---|---|---|
| | | |
| | | |
| | | |
| | | |

**Schedule for Single Bid**

(For complete information covering these items, see plans and specifications)

Bidder's Proposal for making Entire Improvements

| Item No. | Items | Unit | Quantity | Unit Price | Total |
|---|---|---|---|---|---|
| 1 | HMA SURF REM 1 1/2 | SQ YD | 17,095 | | |
| 2 | HMA SURF REM BUTT JT | SQ YD | 184 | | |
| 3 | TEMPORARY RAMP | SQ YD | 40 | | |
| 4 | P BIT MATLS TACK CT | POUND | 11,295 | | |
| 5 | P HMA SC "C" N50 | TON | 2,204 | | |
| 6 | TRAF CONT-PROT SPL | L SUM | 1 | | |

## CONTRACTOR CERTIFICATIONS

| | |
|---|---|
| County | TAZEWELL |
| Local Public Agency | MORTON R.D. |
| Section Number | 16-14000-01-GM (N-MFT) |
| Route | TR 61b & TR 71a |

The certifications hereinafter made by the bidder are each a material representation of fact upon which reliance is placed should the Department enter into the contract with the bidder.

1. **Debt Deliquency.** The bidder or contractor or subcontractor, respectively, certifies that it is not delinquent in the payment of any tax administered by the Department of Revenue unless the individual or other entity is contesting, in accordance with the procedures established by the appropriate revenue Act, its liability for the tax or the amount of tax. Making a false statement voids the contract and allows the Department to recover all amounts paid to the individual or entity under the contract in a civil action.

2. **Bid-Rigging or Bid Rotating.** The bidder or contractor or subcontractor, respectively, certifies that it is not barred from contracting with the Department by reason of a violation of either 720 ILCS 5/33E-3 or 720 ILCS 5/33E-4.

   A violation of Section 33E-3 would be represented by a conviction of the crime of bid-rigging which, in addition to Class 3 felony sentencing, provides that any person convicted of this offense or any similar offense of any state or the United States which contains the same elements as this offense shall be barred for 5 years from the date of conviction from contracting with any unit of State or local government. No corporation shall be barred from contracting with any unit of State or local government as a result of a conviction under this Section of any employee or agent of such corporation if the employee so convicted is no longer employed by the corporation and: (1) it has been finally adjudicated not guilty or (2) if it demonstrates to the governmental entity with which it seeks to contract and that entity finds that the commission of the offense was neither authorized, requested, commanded, nor performed by a director, officer or a high managerial agent in behalf of the corporation.

   A violation of Section 33E-4 would be represented by a conviction of the crime of bid-rotating which, in addition to Class 2 felony sentencing, provides that any person convicted of this offense or any similar offense of any state or the United States which contains the same elements as this offense shall be permanently barred from contracting with any unit of State or local government. No corporation shall be barred from contracting with any unit of State or local government as a result of a conviction under this Section of any employee or agent of such corporation if the employee so convicted is no longer employed by the corporation and: (1) it has been finally adjudicated not guilty or (2) if it demonstrates to the governmental entity with which it seeks to contract and that entity finds that the commission of the offense was neither authorized, requested, commanded, nor performed by a director, officer or a high managerial agent in behalf of the corporation.

3. **Bribery.** The bidder or contractor or subcontractor, respectively, certifies that it has not been convicted of bribery or attempting to bribe an officer or employee of the State of Illinois or any unit of local government, nor has the firm made an admission of guilt of such conduct which is a matter of record, nor has an official, agent, or employee of the firm committed bribery or attempted bribery on behalf of the firm and pursuant to the direction or authorization of a responsible official of the firm.

4. **Interim Suspension or Suspension.** The bidder or contractor or subcontractor, respectively, certifies that it is not currently under a suspension as defined in Subpart I of Title 44 Subtitle A Chapter III Part 6 of the Illinois Administrative Code. Furthermore, if suspended prior to completion of this work, the contract or contracts executed for the completion of this work may be cancelled.

County TAZEWELL
Local Public Agency MORTON R.D.
Section Number 16-14000-01-GM (N-MFT)
Route TR 61b & TR 71a

## SIGNATURES

(If an individual)

Signature of Bidder _____

Business Address _____

(If a partnership)

Firm Name _____

Signed By _____

Business Address _____

Inset Names and Addressed of All Partners _____

(If a corporation)

Corporate Name _____

Signed By _____
President

Business Address _____

Insert Names of Officers
President _____
Secretary _____
Treasurer _____

Attest: _____
Secretary

Illinois Department of Transportation

# Local Agency Proposal Bid Bond

Route TR 61b & TR 71a
County TAZEWELL
Local Agency MORTON R.D.
Section 16-14000-01-GM (N-MFT)

**RETURN WITH BID**

## PAPER BID BOND

WE _____ as PRINCIPAL,

and _____ as SURETY,

are held jointly, severally and firmly bound unto the above Local Agency (hereafter referred to as "LA") in the penal sum of 5% of the total bid price, or for the amount specified in the proposal documents in effect on the date of invitation for bids whichever is the lesser sum. We bind ourselves, our heirs, executors, administrators, successors, and assigns, jointly pay to the LA this sum under the conditions of this instrument.

WHEREAS THE CONDITION OF THE FOREGOING OBLIGATION IS SUCH that, the said PRINCIPAL is submitting a written proposal to the LA acting through its awarding authority for the construction of the work designated as the above section.

THEREFORE if the proposal is accepted and a contract awarded to the PRINCIPAL by the LA for the above designated section and the PRINCIPAL shall within fifteen (15) days after award enter into a formal contract, furnish surety guaranteeing the faithful performance of the work, and furnish evidence of the required insurance coverage, all as provided in the "Standard Specifications for Road and Bridge Construction" and applicable Supplemental Specifications, then this obligation shall become void; otherwise it shall remain in full force and effect.

IN THE EVENT the LA determines the PRINCIPAL has failed to enter into a formal contract in compliance with any requirements set forth in the preceding paragraph, then the LA acting through its awarding authority shall immediately be entitled to recover the full penal sum set out above, together with all court costs, all attorney fees, and any other expense of recovery.

IN TESTIMONY WHEREOF, the said PRINCIPAL and the said SURETY have caused this instrument to be signed by their respective officers this _____ day of _____

**Principal**

_____ (Company Name) _____ (Company Name)

By: _____ (Signature and Title) By: _____ (Signature and Title)

(If PRINCIPLE is a joint venture of two or more contractors, the company names, and authorized signatures of each contractor must be affixed.)

**Surety**

_____ (Name of Surety) By: _____ (Signature of Attorney-in-Fact)

STATE OF ILLINOIS,
COUNTY OF _____

I, _____, a Notary Public in and for said county,
do hereby certify that _____
( Insert names of individuals signing on behalf of PRINCIPAL & SURETY)

who are each personally known to me to be the same persons whose names are subscribed to the foregoing instrument on behalf of PRINCIPAL and SURETY, appeared before me this day in person and acknowledged respectively, that they signed and delivered said instruments as their free and voluntary act for the uses and purposes therein set forth.

Given under my hand and notarial seal this _____ day of _____

My commission expires _____ _____ (Notary Public)

## ELECTRONIC BID BOND

☐ **Electronic bid bond is allowed (box must be checked by LA if electronic bid bond is allowed)**

The Principal may submit an electronic bid bond, in lieu of completing the above section of the Proposal Bid Bond Form. By providing an electronic bid bond ID code and signing below, the Principal is ensuring the identified electronic bid bond has been executed and the Principal and Surety are firmly bound unto the LA under the conditions of the bid bond as shown above. (If PRINCIPAL is a joint venture of two or more contractors, an electronic bid bond ID code, company/Bidder name title and date must be affixed for each contractor in the venture.)

| | | | | | | | | | | | |
|---|---|---|---|---|---|---|---|---|---|---|---|
| | | | | | | | | | | | |

Electronic Bid Bond ID Code

_____ (Company/Bidder Name)

_____ (Signature and Title) _____ Date



BLR 12230 (Rev. 7/05

Illinois Department of Transportation

Bureau of Construction
2300 South Dirksen Parkway/Room 322
Springfield, Illinois 62764

# Affidavit of Availability
## For the Letting of _____

**Instructions:** Complete this form by either typing or using black ink. "Authorization to Bid" will not be issued unless both sides of this form are completed in detail. Use additional forms as needed to list all work.

**Part I. Work Under Contract**

List below all work you have under contract as either a prime contractor or a subcontractor. It is required to include all pending low bids not yet awarded or rejected. In a joint venture, list only that portion of the work which is the responsibility of your company. The uncompleted dollar value is to be based upon the most recent engineer's or owners estimate, and must include work subcontracted to others. If no work is contracted, show **NONE.**

| | 1 | 2 | 3 | 4 | Awards Pending | |
|---|---|---|---|---|---|---|
| Contract Number | | | | | | |
| Contract With | | | | | | |
| Estimated Completion Date | | | | | | |
| Total Contract Price | | | | | | Accumulated Totals |
| Uncompleted Dollar Value if Firm is the Prime Contractor | | | | | | |
| Uncompleted Dollar Value if Firm is the Subcontractor | | | | | | |
| | | | | Total Value of All Work | | |

**Part II. Awards Pending and Uncompleted Work to be done with your own forces.**

List below the uncompleted dollar value of work for each contract and awards pending to be completed with your own forces. All work subcontracted to others will be listed on the reverse of this form. In a joint venture, list only that portion of the work to be done by your company. If no work is contracted, show NONE.

| | | | | | | Accumulated Totals |
|---|---|---|---|---|---|---|
| Earthwork | | | | | | |
| Portland Cement Concrete Paving | | | | | | |
| HMA Plant Mix | | | | | | |
| HMA Paving | | | | | | |
| Clean & Seal Cracks/Joints | | | | | | |
| Aggregate Bases & Surfaces | | | | | | |
| Highway, R.R. and Waterway Structures | | | | | | |
| Drainage | | | | | | |
| Electrical | | | | | | |
| Cover and Seal Coats | | | | | | |
| Concrete Construction | | | | | | |
| Landscaping | | | | | | |
| Fencing | | | | | | |
| Guardrail | | | | | | |
| Painting | | | | | | |
| Signing | | | | | | |
| Cold Milling, Planning & Rotomilling | | | | | | |
| Demolition | | | | | | |
| Pavement Markings (Paint) | | | | | | |
| Other Construction (List) | | | | | | |
| | | | | | | $ 0.00 |
| Totals | | | | | | |

Disclosure of this information is **REQUIRED** to accomplish the statutory purpose as outlined in the "Illinois Procurement Code." Failure to comply will result in non-issuance of an "Authorization To Bid." This form has been approved by the State Forms Management Center.

**Part III. Work Subcontracted to Others.**

For each contract described in Part I, list all the work you have subcontracted to others.

| | 1 | 2 | 3 | 4 | Awards Pending |
|---|---|---|---|---|---|
| Subcontractor | | | | | |
| Type of Work | | | | | |
| Subcontract Price | | | | | |
| Amount Uncompleted | | | | | |
| Subcontractor | | | | | |
| Type of Work | | | | | |
| Subcontract Price | | | | | |
| Amount Uncompleted | | | | | |
| Subcontractor | | | | | |
| Type of Work | | | | | |
| Subcontract Price | | | | | |
| Amount Uncompleted | | | | | |
| Subcontractor | | | | | |
| Type of Work | | | | | |
| Subcontract Price | | | | | |
| Amount Uncompleted | | | | | |
| Subcontractor | | | | | |
| Type of Work | | | | | |
| Subcontract Price | | | | | |
| Amount Uncompleted | | | | | |
| Total Uncompleted | | | | | |

I, being duly sworn, do hereby declare that this affidavit is a true and correct statement relating to ALL uncompleted contracts of the undersigned for Federal, State, County, City and private work, including ALL subcontract work, ALL pending low bids not yet awarded or rejected and ALL estimated completion dates.

Subscribed and sworn to before me

this _____ day of _____ , _____ Type or Print Name _____

Officer or Director Title

_____ Signed _____

Notary Public

My commission expires _____

Company _____

(Notary Seal)

Address _____

_____

Illinois Department of Transportation

# Apprenticeship or Training Program Certification

**Return with Bid**

| | |
|---|---|
| Route | TR 61b & TR 71a |
| County | TAZEWELL |
| Local Agency | MORTON R.D. |
| Section | 16-14000-01-GM (N-MFT) |

***All contractors are required to complete the following certification***:

☒ For this contract proposal or for all groups in this deliver and install proposal.

☐ For the following deliver and install groups in this material proposal:

Illinois Department of Transportation policy, adopted in accordance with the provisions of the Illinois Highway Code, requires this contract to be awarded to the lowest responsive and responsible bidder. The award decision is subject to approval by the Department. In addition to all other responsibility factors, this contract or deliver and install proposal requires all bidders and all bidders' subcontractors to disclose participation in apprenticeship or training programs that are (1) approved by and registered with the United States Department of Labor's Bureau of Apprenticeship and Training, and (2) applicable to the work of the above indicated proposals or groups. Therefore, all bidders are required to complete the following certification:

I. Except as provided in paragraph IV below, the undersigned bidder certifies that it is a participant, either as an individual or as part of a group program, in an approved apprenticeship or training program applicable to each type of work or craft that the bidder will perform with its own employees.

II. The undersigned bidder further certifies for work to be performed by subcontract that each of its subcontractors submitted for approval either (A) is, at the time of such bid, participating in an approved, applicable apprenticeship or training program; or (B) will, prior to commencement of performance of work pursuant to this contract, establish participation in an approved apprenticeship or training program applicable to the work of the subcontract.

III. The undersigned bidder, by inclusion in the list in the space below, certifies the official name of each program sponsor holding the Certificate of Registration for all of the types of work or crafts in which the bidder is a participant and that will be performed with the bidder's employees. Types of work or craft that will be subcontracted shall be included and listed as subcontract work. The list shall also indicate any type of work or craft job category for which there is no applicable apprenticeship or training program available.

IV. Except for any work identified above, any bidder or subcontractor that shall perform all or part of the work of the contract or deliver and install proposal solely by individual owners, partners or members and not by employees to whom the payment of prevailing rates of wages would be required, check the following box, and identify the owner/operator workforce and positions of ownership. ☐

_____

_____

_____

_____

_____

The requirements of this certification and disclosure are a material part of the contract, and the contractor shall require this certification provision to be included in all approved subcontracts. The bidder is responsible for making a complete report and shall make certain that each type of work or craft job category that will be utilized on the project is accounted for and listed. The Department at any time before or after award may require the production of a copy of each applicable Certificate of Registration issued by the United States Department of Labor evidencing such participation by the contractor and any or all of its subcontractors. In order to fulfill the participation requirement, it shall not be necessary that any applicable program sponsor be currently taking or that it will take applications for apprenticeship, training or employment during the performance of the work of this contract or deliver and install proposal.

Bidder: _____ By: _____
(Signature)

Address: _____ Title: _____

**RETURN WITH BID**

Illinois Department of Transportation

## Affidavit of Illinois Business Office

County TAZEWELL
Local Public Agency MORTON R.D.
Section Number 16-14000-01-GM (N-MFT)
Route TR 61b & TR 71a

State of _____ )
) ss.
County of _____ )

I, _____ of _____ , _____ ,
(Name of Affiant) (City of Affiant) (State of Affiant

being first duly sworn upon oath, states as follows:

1. That I am the _____ of _____ .
   officer or position bidder
2. That I have personal knowledge of the facts herein stated.
3. That, if selected under this proposal, _____ , will maintain a
   (bidder)

   business office in the State of Illinois which will be located in _____ County, Illinois.
4. That this business office will serve as the primary place of employment for any persons employed in the construction contemplated by this proposal.
5. That this Affidavit is given as a requirement of state law as provided in Section 30-22(8) of the Illinois Procurement Code.

_____
(Signature)

_____
(Print Name of Affiant)

This instrument was acknowledged before me on day of _____ , _____ .

(SEAL)

_____
(Signature of Notary Public)

INDEX
FOR
SUPPLEMENTAL SPECIFICATIONS
AND RECURRING SPECIAL PROVISIONS

Adopted April 1, 2016

This index contains a listing of SUPPLEMENTAL SPECIFICATIONS, frequently used RECURRING SPECIAL PROVISIONS, and LOCAL ROADS AND STREETS RECURRING SPECIAL PROVISIONS.

No ERRATA this year.

SUPPLEMENTAL SPECIFICATIONS


Std. Spec. Sec. Page No.

No Supplemental Specifications this year.

CHECK SHEET
FOR
RECURRING SPECIAL PROVISIONS

Adopted April 1, 2016

The following RECURRING SPECIAL PROVISIONS indicated by an "X" are applicable to this contract and are included by reference:

RECURRING SPECIAL PROVISIONS


| CHECK SHEET # | | | PAGE NO. |
|---|---|---|---|
| 1 | ☐ | Additional State Requirements for Federal-Aid Construction Contracts | 1 |
| 2 | ☐ | Subletting of Contracts (Federal-Aid Contracts) | 4 |
| 3 | ☐ | EEO | 5 |
| 4 | ☐ | Specific EEO Responsibilities Non Federal-Aid Contracts | 15 |
| 5 | ☐ | Required Provisions - State Contracts | 20 |
| 6 | ☐ | Asbestos Bearing Pad Removal | 26 |
| 7 | ☐ | Asbestos Waterproofing Membrane and Asbestos Hot-Mix Asphalt Surface Removal | 27 |
| 8 | ☐ | Temporary Stream Crossings and In-Stream Work Pads | 28 |
| 9 | ☐ | Construction Layout Stakes Except for Bridges | 29 |
| 10 | ☐ | Construction Layout Stakes | 32 |
| 11 | ☐ | Use of Geotextile Fabric for Railroad Crossing | 35 |
| 12 | ☐ | Subsealing of Concrete Pavements | 37 |
| 13 | ☐ | Hot-Mix Asphalt Surface Correction | 41 |
| 14 | ☐ | Pavement and Shoulder Resurfacing | 43 |
| 15 | ☐ | Patching with Hot-Mix Asphalt Overlay Removal | 44 |
| 16 | ☐ | Polymer Concrete | 45 |
| 17 | ☐ | PVC Pipeliner | 47 |
| 18 | ☐ | Bicycle Racks | 48 |
| 19 | ☐ | Temporary Portable Bridge Traffic Signals | 50 |
| 20 | ☐ | Work Zone Public Information Signs | 52 |
| 21 | ☐ | Nighttime Inspection of Roadway Lighting | 53 |
| 22 | ☐ | English Substitution of Metric Bolts | 54 |
| 23 | ☐ | Calcium Chloride Accelerator for Portland Cement Concrete | 55 |
| 24 | ☐ | Quality Control of Concrete Mixtures at the Plant | 56 |
| 25 | ☐ | Quality Control/Quality Assurance of Concrete Mixtures | 64 |
| 26 | ☐ | Digital Terrain Modeling for Earthwork Calculations | 80 |
| 27 | ☐ | Pavement Marking Removal | 82 |
| 28 | ☐ | Preventive Maintenance – Bituminous Surface Treatment | 83 |
| 29 | ☐ | Preventive Maintenance – Cape Seal | 89 |
| 30 | ☐ | Preventive Maintenance – Micro-Surfacing | 104 |
| 31 | ☐ | Preventive Maintenance – Slurry Seal | 115 |
| 32 | ☐ | Temporary Raised Pavement Markers | 125 |
| 33 | ☐ | Restoring Bridge Approach Pavements Using High-Density Foam | 126 |

CHECK SHEET
FOR
LOCAL ROADS AND STREETS RECURRING SPECIAL PROVISIONS

Adopted April 1, 2016

The following LOCAL ROADS AND STREETS RECURRING SPECIAL PROVISIONS indicated by an "X" are applicable to this contract and are included by reference:

LOCAL ROADS AND STREETS RECURRING SPECIAL PROVISIONS


| CHECK SHEET # | | | PAGE NO. |
|---|---|---|---|
| LRS 1 | | **Reserved** | 130 |
| LRS 2 | ☐ | Furnished Excavation | 131 |
| LRS 3 | ☒ | Work Zone Traffic Control Surveillance | 132 |
| LRS 4 | ☒ | Flaggers in Work Zones | 133 |
| LRS 5 | ☒ | Contract Claims | 134 |
| LRS 6 | ☒ | Bidding Requirements and Conditions for Contract Proposals | 135 |
| LRS 7 | ☐ | Bidding Requirements and Conditions for Material Proposals | 141 |
| LRS 8 | | **Reserved** | 147 |
| LRS 9 | ☐ | Bituminous Surface Treatments | 148 |
| LRS 10 | | **Reserved** | 149 |
| LRS 11 | ☒ | Employment Practices | 150 |
| LRS 12 | ☒ | Wages of Employees on Public Works | 152 |
| LRS 13 | ☒ | Selection of Labor | 154 |
| LRS 14 | ☐ | Paving Brick and Concrete Paver Pavements and Sidewalks | 155 |
| LRS 15 | ☒ | Partial Payments | 158 |
| LRS 16 | ☐ | Protests on Local Lettings | 159 |
| LRS 17 | ☒ | Substance Abuse Prevention Program | 160 |
| LRS 18 | ☐ | Multigrade Cold Mix Asphalt | 161 |

# TABLE OF CONTENTS


| | |
|---|---|
| Page 1 | Bidding Requirements and Conditions |
| | Description of Work |
| | Traffic |
| | Traffic Control Plan |
| Page 2 | Traffic Control Plan (Cont'd.) |
| | Substitution of Bituminous Mixtures |
| | Anti-Strip Additive for Hot-Mix Asphalt |
| | Hot-Mix Asphalt Surface Removal- Butt Joint |
| Page 3 | Hot-Mix Asphalt Surface Removal |
| Page 4 | Hot-Mix Asphalt Surface Removal (cont'd.) |
| Page 5 | Hot-Mix Asphalt Surface Removal (cont'd.) |
| Page 6 | Hot-Mix Asphalt Surface Removal (cont'd.) |
| | Drop-Offs |
| | Aggregate Shoulders |
| | Village of Morton (Queenwood Road) |
| | Weight Limits |
| | General Notes |
| | Pre-Construction Meeting |
| | Time Schedule |
| Page 7-9 | BDE Special Provisions Check Sheets |
| Page 8-25 | BDE Special Provisions |
| Page 26-32 | LR Special Provisions |
| Page 33 | Standard for HMA Surfacing at Sideroads, Entrances and Mailboxes |
| Page 34 | Butt Joint Detail |
| Page 35 | BLR 24-2 Mailbox Turnout for Local Roads |
| Page 36-39 | Project Location Maps |
| Page 40-44 | Quantity Sheet |
| Page 45-52 | Traffic Control Standards |
| Page 53-58 | Prevailing Wage Rates, Trade Categories and Classes |

# TABLE OF CONTENTS


| | |
|---|---|
| Page 1 | Bidding Requirements and Conditions |
| | Description of Work |
| | Traffic |
| | Traffic Control Plan |
| Page 2 | Traffic Control Plan (Cont'd.) |
| | Substitution of Bituminous Mixtures |
| | Anti-Strip Additive for Hot-Mix Asphalt |
| | Hot-Mix Asphalt Surface Removal- Butt Joint |
| Page 3 | Hot-Mix Asphalt Surface Removal |
| Page 4 | Hot-Mix Asphalt Surface Removal (cont'd.) |
| Page 5 | Hot-Mix Asphalt Surface Removal (cont'd.) |
| Page 6 | Hot-Mix Asphalt Surface Removal (cont'd.) |
| | Drop-Offs |
| | Aggregate Shoulders |
| | Village of Morton (Queenwood Road) |
| | Weight Limits |
| | General Notes |
| | Pre-Construction Meeting |
| | Time Schedule |
| Page 7-9 | BDE Special Provisions Check Sheets |
| Page 10-26 | BDE Special Provisions |
| Page 27-33 | LR Special Provisions |
| Page 34-37 | Project Location Maps |
| Page 38-42 | Quantity Sheets |
| Page 43 | Standard for HMA Surfacing at Entrances, etc. / Butt Joint Detail |
| Page 44-51 | Traffic Control Standards |
| Page 52-57 | Prevailing Wage Rates, Trade Categories and Classes |

**TAZEWELL COUNTY, ILLINOIS**
**SPECIAL PROVISIONS**

The following Special Provisions supplement the "Standard Specifications for Road and Bridge Construction", Adopted April 1, 2016, the latest edition of the "Manual on Uniform Traffic Control Devices for Streets and Highways" and the "Manual of Test Procedures of Materials" in effect on the date of invitation of bids, and the "Supplemental Specifications and Recurring Special Provisions" indicated on the Check Sheet included herein which apply to and govern the construction of Sec. 16-14000-01-GM (N-MFT) , and in case of conflict with any part, or parts, of said Specifications, the said Special Provisions shall take precedence and shall govern.

**BIDDING REQUIREMENTS AND CONDITIONS:** Pre-qualification of bidders with the Illinois Department of Transportation is required.

**DESCRIPTION OF WORK:** The work of this section consists of Hot-Mix Asphalt Surface Removal- Butt Joint, Hot-Mix Asphalt Surface Removal, 1.5" and Polymerized Hot-Mix Asphalt Surface Course, Mix "C", N50 over existing bituminous surfaces and related work.

**TRAFFIC:** The roads shall remain open for both local and through traffic except during Polymerized Bituminous Materials (Tack Coat) operations where such the roadway shall be closed temporarily until the prime coat is dry for public travel. Also, the Morton Township Highway Commissioner and the Village of Morton Engineer (Superintendent of Public Works) shall be notified a minimum 48 hours in advance of the start of construction to properly notify the property owners along the construction improvement routes.

**TRAFFIC CONTROL PLAN:** Traffic Control shall be in accordance with the applicable sections of the "Standard Specifications for Road and Bridge Construction", the applicable guidelines contained in the "Manual on Uniform Traffic Control Devices for Streets and Highways", these Special Provisions, and any special details and Highway Standards contained herein and in the plans.

Special attention is called to Articles 107.09 and 107.14 of the "Standard Specifications for Road and Bridge Construction" and the Traffic Control Standards 701006-05, 701011-04, 701201-04, 701301-04, 701306-03 and 701901-05 contained herein.

The presence of temporary traffic control drawings or standards in the proposal or contract, whether a pay item or not, does not relieve the Contractor of his obligation to the public. The Contractor shall provide, if conditions warrant by the Engineer, all protection deemed necessary beyond that shown in the proposal or Special Provisions.

**TRAFFIC CONTROL PLAN (cont'd.):**

"NO PASSING ZONES NOT STRIPED NEXT____ MILES" signs shall be posted in accordance with Article 701.17.

Construction signs shall meet the current Standard Specifications for Traffic Control Items.

Basis of payment: All required Traffic Control shall be paid for at the contract-lump sum price for **TRAFFIC CONTROL AND PROTECTION, SPECIAL.**

**SUBSTITUTION OF BITUMINOUS MIXTURES:** Bituminous Mixtures of a higher quality may be substituted for the designs specified at the approval of the Engineer. The contractor shall provide the Engineer with an approved mix design at least 24 hours prior to its use for his review. Use of the proposed substitute mix shall be solely at the discretion of the Engineer. The new mixture will be measured and paid for under the same applicable articles as the mixture for which it is substituted.

**ANTI-STRIP ADDITIVE FOR HOT-MIX ASPHALT:**
Effective July 30, 2010

If an anti-stripping additive is required for any hot-mix asphalt in accordance with Article 1030.04(c), the cost of the additive will not be paid for separately, but shall be considered as included in the contract unit price bid for the hot-mix asphalt item(s) involved.

**HOT-MIX ASPHALT SURFACE REMOVAL- BUTT JOINT:**
The surface removal shall be performed according to Article 406.08 and Section 440.

Revise **Article 440.06 Disposal of Material** to read as follows: All milled material will remain the property of the Morton Township Road District and shall be transported from the job site to the Morton Township Road District storage yard located south of Hicks Gas at 27833 Cooper Road in Morton, Illinois behind Roanoke Farmers Association-Cooper Station grain elevator facility. Other sites may be determined by mutual agreement between the Contractor and the Road District.

Add the following to **Article 440.08 Basis of Payment:** Hauling of milled material shall be included in the cost of Hot-Mix Asphalt Surface Removal- Butt Joint and no extra compensation will be allowed.

.

**TAZEWELL COUNTY, ILLINOIS**
**SPECIAL PROVISIONS**

**HOT-MIX ASPHALT SURFACE REMOVAL:**
Effective March 1, 1993 Revised November 8, 2013

Description: This work shall consist of removing a portion of the existing hot-mix asphalt concrete surface course in accordance with the applicable portions of Section 440 and 1101 of the Standard Specifications, this special provision, details in the plans and as directed by the Engineer. The cold milled salvaged aggregate resulting from this operation shall will remain the property of the Morton Township Road District and shall be transported from the job site to the Morton Township Road District storage yard located south of Hicks Gas at 27833 Cooper Road in Morton, Illinois behind Roanoke Farmers Association-Cooper Station grain elevator facility. Other sites may be determined by mutual agreement between the Contractor and the Road District. If other sites are approved, the Contractor will be responsible for preventing theft of milled material or unauthorized removal of said material from sites other than Morton Township Road District property.

Equipment: The machine used for milling and planing shall be a self-propelled grinding machine having a minimum 12' (3.6 m) wide drum at least 28" (710 mm) in diameter. When a milling width in excess of 12′ is required and the Contractor's milling machine is less than the required width shown in the plans, the remaining area shall be milled with a machine capable of meeting the requirements of this special provision. Milling attachments used with skid steer tractors will not be allowed for longitudinal areas to mill additional widths.

When the teeth become worn so that they do not produce a uniform surface texture, they shallall be changed at the same time (as a unit). Occasionally, individual teeth may be changed if they lock up or break, but this method shall not be used to avoid changing the set of teeth as a unit. Occasional gouges, due to deteriorated pavement condition, or separation of lifts will not be cause to replace all teeth. The Engineer will be the sole judge of the cause of the pavement gouging and the corrective work required. Corrective work due to negligence or poor workmanship shall be at the Contractor's expense.

The moldboard is critical in obtaining the desired surface texture. It shall be straight, true, and free of excessive nicks or wear, and it shall be replaced as necessary to uniformly produce the required surface texture. Gouging of the pavement by more than 1/4 inch (6 mm) shall be sufficient cause to require replacement of all teeth.

**TAZEWELL COUNTY, ILLINOIS**
**SPECIAL PROVISIONS**

Construction Requirements

General: Weather conditions, when milling work is performed, must be such that short term or temporary pavement markings can be placed the day the surface is milled in accordance with Section 703 "Work Zone Pavement Markings".

An automatic grade control device shall be used when milling mainline pavement and shall be capable of controlling the elevation of the drum relative to either a preset grade control stringline or a grade reference device traveling on the adjacent pavement surface. The automatic grade control device may be utilized only on one side of the machine with a automatic slope control device controlling the opposite side. The traveling grade reference device shall not be less than 30 feet (9 m) in length. When milling cross roads, turn lanes, intersections, crossovers, or other miscellaneous areas, the Engineer may permit the matching shoe. The Contractor, at his option, may also substitute an approved 6' wide (1.8 m) machine for areas other than mainline pavement.

The Contractor shall mill a depth according to the plans herein at the centerline and project the proposed cross slope to the edge of pavement. In the event the milling at the outer edge of the lane would exceed inches ( mm); then the Contractor shall reduce the cut at the centerline to provide the maximum cut of inches ( mm) at the edge of pavement. If deemed necessary, the Contractor may reduce the cross slope from normal 1.5% to 1%.

Surface tests will be performed in accordance with Article 407.09(a) of the Standard Specifications. The longitudinal profile will be taken 3 ft. (0.9 m) from and parallel to each edge of pavement and 3 ft. (0.9 m) from and parallel to the centerline on each side. If a shadow area is found at the 3 ft. (0.9 m) points the pavement smoothness tester will be moved sufficient distance either side to measure the Contractor's milling efforts. Any surface variations exceeding the tolerance of Table 1 of Article 407.09 shall be corrected by reprofiling at no additional expense to the Department. In addition, the Contractor shall be responsiblefor refilling with approved hot-mix asphalt mixtures any area that lowered the pavement profile as a result of faulty milling operations if directed by the Engineer. The Contractor shall be responsible for providing the pavement smoothness tester described elsewhere to retest the pavement profile obtained.

If the milling depth is intended to expose the original concrete pavement, then additional hand or machine work may be necessary to remove any remaining veneer of bituminous pavement which may be left in place behind the milling machine. Such work will be at the direction of the Engineer and at no extra cost to the Department.

The Contractor shall provide a 10 foot (3 m) straightedge equipped with a carpenter's level or a 7 foot (2.1 m) electronic straightedge to check the cross slope of the roadway at regular intervals as directed by the Engineer.

Surface Texture: Each tooth on the cutting drum shall produce a series of discontinuous longitudinal striations. There shall be 16 to 20 striations (tooth marks) for each tooth for each 6 feet (1.8 m) in the longitudinal direction, and each striation shall be 1.7 inches ± 0.2 inch (43 ± 5 mm) in length after the area is planed by the moldboard. Thus, the planed length between each pair of striations shall be 2.3 inches ± 0.2 inch (58 ± 5 mm). There shall be 80 to 96 rows of discontinuous longitudinal striations for each 5 feet (1.5 m) in the transverse dimension. The areas between the striations in both the longitudinal and transverse directions shall be flat topped and coplaner. The moldboard shall be used to cut this plane; and any time the operation fails to produce this flat plane interspersed with a uniform pattern of discontinuous longitudinal striations, the operation shall be stopped and the cause determined and corrected before recommencing. Other similar patterns of uniform discontinuous longitudinal striations interspersed on a flat plane may be approved by the Engineer. The drawing titled "Hot-Mix Asphalt Surface Removal" showing the desired surface texture is included in the plans.

The start-up milling speed shall be limited to a maximum of 50 foot (15 m) per minute. The Contractor shall limit his operations to this speed to demonstrate his ability to obtain the striations and ride ability as described above. If the Contractor is able to demonstrate that he can consistently obtain the desired striations and ride ability at a greater speed he will be permitted to run at the increased speed.

Cleanup: After cold milling a traffic lane and before opening the lane to traffic, the pavement shall be swept by **(a) mechanical broom or (b) self-propelled street sweeper with power vacuum capability** to prevent compaction of the cuttings onto the pavement. All loose material shall be removed from the roadway. Before the prime coat is placed, the pavement shall be cleaned of all foreign material to the satisfaction of the Engineer.

This cleanup work shall be considered included in the contract unit price per Square Yard for HOT-MIX ASPHALT SURFACE REMOVAL of the depth specified, and no additional compensation will be allowed.

Method of Measurement:
(a) Contract Quantities. The requirements for the use of Contract Quantities shall be Article 202.07(a) of the Standard Specifications.

(b) Measured Quantities. Cold milling and planing will be measured and the area computed in square yards (square meters) of surface.

Areas not milled (shadowed areas) due to rutting in the existing pavement surface will be included in the area measured for payment.

Basis of Payment: The cold milling and planing will be paid for at the contract unit price per Square Yard for HOT-MIX ASPHALT SURFACE REMOVAL of the depth specified. Payment as specified will include variations in depth of cuts due to rutting, superelevations, and pavement crown and no additional compensation will be allowed.

**DROP-OFFS:** Revise Article 701.07 paragraph 3 of the Standard Specifications to read as follows: "At locations where construction operations result in a differential in elevation exceeding 2 in. between the edge of pavement or edge of shoulder within 3 ft. of the edge of the pavement and the earth or aggregate shoulders, Type I or II barricades or vertical panels shall be placed at 300' centers or as directed by the Engineer." This delineation will be considered as included in the contract-lump sum price for TRAFFIC CONTROL AND PROTECTION, SPECIAL.

**AGGREGATE SHOULDERS:** Aggregate shoulders shall be constructed by others

**VILLAGE OF MORTON (QUEENWOOD ROAD):** The quantities for the sections maintained by the Village of Morton on Queenwood Road shall not be paid for by the Morton Township Road District but be measured separately for payment by the Village of Morton. These quantities shall be billed to the following address for payment:
**Village of Morton**
**Attn.: Mr. Craig Loudermilk, Supt. of Public Works and Village Engineer**
**120 North Main St.**
**P.O. Box 28**
**Morton, Illinois 61550-0028**

**WEIGHT LIMITS:** Legal weight limits shall be observed on Morton Road District and Village of Morton roads and structures they contain at all times.

**GENERAL NOTES:** Where section or subsection monuments are encountered, the Engineer shall be notified before such monuments are removed. The Contractor shall protect and carefully preserve all property markers and monuments until the owner, and authorized surveyor or agent has witnessed or otherwise referenced their location.

**PRE-CONSTRUCTION MEETING:** A pre-construction meeting for this Section is required.

**TIME SCHEDULE:** The specified completion date for this project is August 15, 2016.

BDE SPECIAL PROVISIONS
For the April 22 and June 10, 2016 Lettings

The following special provisions indicated by an "x" are applicable to this contract and will be included by the Project Development and Implementation Section of the BD&E. An * indicates a new or revised special provision for the letting.

| | File Name | # | | Special Provision Title | Effective | Revised |
|---|---|---|---|---|---|---|
| | 80099 | 1 | | Accessible Pedestrian Signals (APS) | April 1, 2003 | Jan. 1, 2014 |
| * | 80274 | 2 | | Aggregate Subgrade Improvement | April 1, 2012 | April 1, 2016 |
| | 80192 | 3 | | Automated Flagger Assistance Device | Jan. 1, 2008 | |
| | 80173 | 4 | | Bituminous Materials Cost Adjustments | Nov. 2, 2006 | July 1, 2015 |
| | 80241 | 5 | | Bridge Demolition Debris | July 1, 2009 | |
| | 5026I | 6 | | Building Removal-Case I (Non-Friable and Friable Asbestos) | Sept. 1, 1990 | April 1, 2010 |
| | 5048I | 7 | | Building Removal-Case II (Non-Friable Asbestos) | Sept. 1, 1990 | April 1, 2010 |
| | 5049I | 8 | | Building Removal-Case III (Friable Asbestos) | Sept. 1, 1990 | April 1, 2010 |
| | 5053I | 9 | | Building Removal-Case IV (No Asbestos) | Sept. 1, 1990 | April 1, 2010 |
| | 80360 | 10 | ✔ | Coarse Aggregate Quality | July 1, 2015 | |
| | 80198 | 11 | | Completion Date (via calendar days) | April 1, 2008 | |
| | 80199 | 12 | | Completion Date (via calendar days) Plus Working Days | April 1, 2008 | |
| | 80293 | 13 | | Concrete Box Culverts with Skews > 30 Degrees and Design Fills ≤ 5 Feet | April 1, 2012 | April 1, 2015 |
| * | 80311 | 14 | | Concrete End Sections for Pipe Culverts | Jan. 1, 2013 | April 1, 2016 |
| * | 80277 | 15 | | Concrete Mix Design – Department Provided | Jan. 1, 2012 | April 1, 2016 |
| | 80261 | 16 | | Construction Air Quality – Diesel Retrofit | June 1, 2010 | Nov. 1, 2014 |
| * | 80029 | 17 | | Disadvantaged Business Enterprise Participation | Sept. 1, 2000 | Jan. 2, 2016 |
| * | 80363 | 18 | | Engineer's Field Office | April 1, 2016 | |
| | 80358 | 19 | | Equal Employment Opportunity | April 1, 2015 | |
| * | 80364 | 20 | ✔ | Errata for the 2016 Standard Specifications | April 1, 2016 | |
| | 80229 | 21 | | Fuel Cost Adjustment | April 1, 2009 | July 1, 2015 |
| | 80304 | 22 | | Grooving for Recessed Pavement Markings | Nov. 1, 2012 | Aug. 1, 2014 |
| * | 80246 | 23 | ✔ | Hot-Mix Asphalt – Density Testing of Longitudinal Joints | Jan. 1, 2010 | April 1, 2016 |
| * | 80347 | 24 | | Hot-Mix Asphalt – Pay for Performance Using Percent Within Limits – Jobsite Sampling | Nov. 1, 2014 | April 1, 2016 |
| * | 80336 | 25 | | Longitudinal Joint and Crack Patching | April 1, 2014 | April 1, 2016 |
| | 80045 | 26 | | Material Transfer Device | June 15, 1999 | Aug. 1, 2014 |
| * | 80342 | 27 | | Mechanical Side Tie Bar Inserter | Aug. 1, 2014 | April 1, 2016 |
| | 80165 | 28 | | Moisture Cured Urethane Paint System | Nov. 1, 2006 | Jan. 1, 2010 |
| * | 80361 | 29 | | Overhead Sign Structures Certification of Metal Fabricator | Nov. 1, 2015 | April 1, 2016 |
| * | 80349 | 30 | | Pavement Marking Blackout Tape | Nov. 1, 2014 | April 1, 2016 |
| * | 80298 | 31 | | Pavement Marking Tape Type IV | April 1, 2012 | April 1, 2016 |
| * | 80365 | 32 | | Pedestrian Push-Button | April 1, 2016 | |
| * | 80359 | 33 | | Portland Cement Concrete Bridge Deck Curing | April 1, 2015 | April 1, 2016 |
| * | 80353 | 34 | | Portland Cement Concrete Inlay or Overlay | Jan. 1, 2015 | April 1, 2016 |
| * | 80338 | 35 | | Portland Cement Concrete Partial Depth Hot-Mix Asphalt Patching | April 1, 2014 | April 1, 2016 |
| * | 80300 | 36 | | Preformed Plastic Pavement Marking Type D - Inlaid | April 1, 2012 | April 1, 2016 |
| | 80328 | 37 | | Progress Payments | Nov. 2, 2013 | |
| | 3426I | 38 | | Railroad Protective Liability Insurance | Dec. 1, 1986 | Jan. 1, 2006 |
| | 80157 | 39 | | Railroad Protective Liability Insurance (5 and 10) | Jan. 1, 2006 | |
| * | 80306 | 40 | ✔ | Reclaimed Asphalt Pavement (RAP) and Reclaimed Asphalt Shingles (RAS) | Nov. 1, 2012 | April 1, 2016 |
| * | 80340 | 41 | | Speed Display Trailer | April 2, 2014 | April 1, 2016 |
| | 80127 | 42 | | Steel Cost Adjustment | April 2, 2004 | July 1, 2015 |
| | 80362 | 43 | | Steel Slag in Trench Backfill | Jan. 1, 2016 | |
| * | 80317 | 44 | | Surface Testing of Hot-Mix Asphalt Overlays | Jan. 1, 2013 | April 1, 2016 |

| File Name | # | | Special Provision Title | Effective | Revised |
|---|---|---|---|---|---|
| 80355 | 45 | | Temporary Concrete Barrier | Jan. 1, 2015 | July 1, 2015 |
| 20338 | 46 | | Training Special Provisions | Oct. 15, 1975 | |
| 80318 | 47 | | Traversable Pipe Grate | Jan. 1, 2013 | April 1, 2014 |
| * 80288 | 48 | | Warm Mix Asphalt | Jan. 1, 2012 | April 1, 2016 |
| 80302 | 49 | | Weekly DBE Trucking Reports | June 2, 2012 | April 2, 2015 |
| 80289 | 50 | | Wet Reflective Thermoplastic Pavement Marking | Jan. 1, 2012 | |
| 80071 | 51 | | Working Days | Jan. 1, 2002 | |

The following special provisions and recurring special provisions are in the 2016 Standard Specifications.

| File Name | Special Provision Title | New Location | Effective | Revised |
|---|---|---|---|---|
| 80240 | Above Grade Inlet Protection | Articles 280.02, 280.04, and 1081.15 | July 1, 2009 | Jan. 1, 2012 |
| 80310 | Coated Galvanized Steel Conduit | Article 811.03 | Jan. 1, 2013 | Jan. 1, 2015 |
| 80341 | Coilable Nonmetallic Conduit | Article 1088.01 | Aug. 1, 2014 | Jan. 1, 2015 |
| 80294 | Concrete Box Culverts with Skews ≤ 30 Degrees Regardless of Design Fill and Skews > 30 Degrees with Design Fills > 5 Feet | Article 540.04 | April 1, 2012 | April 1, 2014 |
| 80334 | Concrete Gutter, Curb, Median, and Paved Ditch | Articles 606.02, 606.07, and 1050.04 | April 1, 2014 | Aug. 1, 2014 |
| 80335 | Contract Claims | Article 109.09 | April 1, 2014 | |
| Chk Sht #27 | English Substitution of Metric Reinforcement Bars | Article 508.09 | April 1, 1996 | Jan. 1, 2011 |
| 80265 | Friction Aggregate | Articles 1004.01 and 1004.03 | Jan. 1, 2011 | Nov. 1, 2014 |
| 80329 | Glare Screen | Sections 638 and 1085 | Jan. 1, 2014 | |
| Chk Sht #20 | Guardrail and Barrier Wall Delineation | Sections 635, 725, 782, and 1097 | Dec. 15, 1993 | Jan. 1, 2012 |
| 80322 | Hot-Mix Asphalt – Mixture Design Composition and Volumetric Requirements | Sections 312, 355, 406, 407, 442, 482, 601, 1003, 1004, 1030, and 1102 | Nov. 1, 2013 | Nov. 1, 2014 |
| 80323 | Hot-Mix Asphalt – Mixture Design Verification and Production | Sections 406, 1030, and 1102 | Nov. 1, 2013 | Nov. 1, 2014 |
| 80348 | Hot-Mix Asphalt – Prime Coat | Sections 403, 406, 407, 408, 1032, and 1102 | Nov. 1, 2014 | |
| 80315 | Insertion Lining of Culverts | Sections 543 and 1029 | Jan. 1, 2013 | Nov. 1, 2013 |
| 80351 | Light Tower | Article 1069.08 | Jan. 1, 2015 | |
| 80324 | LRFD Pipe Culvert Burial Tables | Sections 542 and 1040 | Nov. 1, 2013 | April 1, 2015 |
| 80325 | LRFD Storm Sewer Burial Tables | Sections 550 and 1040 | Nov. 1, 2013 | April 1, 2015 |
| 80337 | Paved Shoulder Removal | Article 440.07 | April 1, 2014 | |
| 80254 | Pavement Patching | Article 701.17 | Jan. 1, 2010 | |
| 80352 | Pavement Striping - Symbols | Article 780.14 | Jan. 1, 2015 | |
| Chk Sht #19 | Pipe Underdrains | Section 601 and Articles 1003.01, 1003.04, 1004.05, 1040.06, and 1080.05 | Sept. 9, 1987 | Jan. 1, 2007 |
| 80343 | Precast Concrete Handhole | Articles 814.02, 814.03, and 1042.17 | Aug. 1, 2014 | |
| 80350 | Retroreflective Sheeting for Highway Signs | Article 1091.03 | Nov. 1, 2014 | |
| 80327 | Reinforcement Bars | Section 508 and Articles 421.04, 442.06, 1006.10 | Nov. 1, 2013 | |
| 80344 | Rigid Metal Conduit | Article 1088.01 | Aug. 1, 2014 | |
| 80354 | Sidewalk, Corner, or Crosswalk Closure | Article 1106.02 | Jan. 1, 2015 | April 1, 2015 |
| 80301 | Tracking the Use of Pesticides | Article 107.23 | Aug. 1, 2012 | |
| 80356 | Traffic Barrier Terminals Type 6 or 6B | Article 631.02 | Jan. 1, 2015 | |
| 80345 | Underpass Luminaire | Articles 821.06 and 1067.04 | Aug. 1, 2014 | April 1, 2015 |

| File Name | Special Provision Title | New Location | Effective | Revised |
|---|---|---|---|---|
| 80357 | Urban Half Road Closure with Mountable Median | Articles 701.18, 701.19, and 701.20 | Jan. 1, 2015 | July 1, 2015 |
| 80346 | Waterway Obstruction Warning Luminaire | Article 1067.07 | Aug. 1, 2014 | April 1, 2015 |

The following special provisions require additional information from the designer. The additional information needs to be included in a separate document attached to this check sheet. The Project Development and Implementation section will then include the information in the applicable special provision. The Special Provisions are:

- Bridge Demolition Debris
- Building Removal-Case I
- Building Removal-Case II
- Building Removal-Case III
- Building Removal-Case IV
- Completion Date
- Completion Date Plus Working Days
- DBE Participation
- Material Transfer Device
- Railroad Protective Liability Insurance
- Training Special Provisions
- Working Days

**COARSE AGGREGATE QUALITY (BDE)**

Effective: July 1, 2015

Revise Article 1004.01(b) of the Standard Specifications to read:

"(b) Quality. The coarse aggregate shall be according to the quality standards listed in the following table.

| COARSE AGGREGATE QUALITY | | | | |
|---|---|---|---|---|
| QUALITY TEST | CLASS | | | |
| | A | B | C | D |
| $Na_2SO_4$ Soundness 5 Cycle, ITP 104 [1/], % Loss max. | 15 | 15 | 20 | 25 [2/] |
| Los Angeles Abrasion, ITP 96 [11/], % Loss max. | 40 [3/] | 40 [4/] | 40 [5/] | 45 |
| Minus No. 200 (75 µm) Sieve Material, ITP 11 | 1.0 [6/] | --- | 2.5 [7/] | --- |
| Deleterious Materials [10/] | | | | |
| Shale, % max. | 1.0 | 2.0 | 4.0 [8/] | --- |
| Clay Lumps, % max. | 0.25 | 0.5 | 0.5 [8/] | --- |
| Coal & Lignite, % max. | 0.25 | --- | --- | --- |
| Soft & Unsound Fragments, % max. | 4.0 | 6.0 | 8.0 [8/] | --- |
| Other Deleterious, % max. | 4.0 [9/] | 2.0 | 2.0 [8/] | --- |
| Total Deleterious, % max. | 5.0 | 6.0 | 10.0 [8/] | --- |
| Oil-Stained Aggregate [10/], % max | 5.0 | --- | --- | |

1/ Does not apply to crushed concrete.

2/ For aggregate surface course and aggregate shoulders, the maximum percent loss shall be 30.

3/ For portland cement concrete, the maximum percent loss shall be 45.

4/ Does not apply to crushed slag or crushed steel slag.

5/ For hot-mix asphalt (HMA) binder mixtures, except when used as surface course, the maximum percent loss shall be 45.

6/ For crushed aggregate, if the material finer than the No. 200 (75 µm) sieve consists of the dust from fracture, essentially free from clay or silt, this percentage may be increased to 2.5.

7/ Does not apply to aggregates for HMA binder mixtures.

8/ Does not apply to Class A seal and cover coats.

9/ Includes deleterious chert. In gravel and crushed gravel aggregate, deleterious chert shall be the lightweight fraction separated in a 2.35 heavy media separation. In crushed stone aggregate, deleterious chert shall be the lightweight fraction separated in a 2.55 heavy media separation. Tests shall be run according to ITP 113.

10/ Test shall be run according to ITP 203.

11/ Does not apply to crushed slag.

All varieties of chert contained in gravel coarse aggregate for portland cement concrete, whether crushed or uncrushed, pure or impure, and irrespective of color, will be classed as chert and shall not be present in the total aggregate in excess of 25 percent by weight (mass).

Aggregates used in Class BS concrete (except when poured on subgrade), Class PS concrete, and Class PC concrete (bridge superstructure products only, excluding the approach slab) shall contain no more than two percent by weight (mass) of deleterious materials. Deleterious materials shall include substances whose disintegration is accompanied by an increase in volume which may cause spalling of the concrete."

80360

**ERRATA FOR THE 2016 STANDARD SPECIFICATIONS (BDE)**

Effective: April 1, 2016

Page 84 Article 204.02. In the seventh line of the first paragraph change "AASHTO T 99 (Method C)" to "Illinois Modified AASHTO T 99 (Method C)".

Page 90 Article 205.06. In the first sentence of the third paragraph change "AASHTO T 99 (Method C)" to "Illinois Modified AASHTO T 99 (Method C)".

Page 91 Article 205.06. In the first sentence of the fourth paragraph change "AASHTO T 99 (Method C)" to "Illinois Modified AASHTO T 99 (Method C)", and in the second sentence change "AASHTO T 224" to "Illinois Modified AASHTO T 99 (Annex A1)".

Page 91 Article 205.06. In the second line of the fifth paragraph change "AASHTO T 191" to "Illinois Modified AASHTO T 191".

Page 91 Article 205.06. In the sixth line of the eighth paragraph change "AASHTO T 99 (Method C)" to "Illinois Modified AASHTO T 99 (Method C)".

Page 148 Article 302.09. In the second sentence of the fifth paragraph change "AASHTO T 191" to "Illinois Modified AASHTO T 191", and in the third sentence change "AASHTO T 99" to "Illinois Modified AASHTO T 99".

Page 152 Article 310.09. In the second sentence of the second paragraph change "AASHTO T 191" to "Illinois Modified AASHTO T 191", and in the third sentence change "AASHTO T 99" to "Illinois Modified AASHTO T 99".

Page 155 Article 311.05(a). In the first sentence of the fifth paragraph change "AASHTO T 99 (Method C)" to "Illinois Modified AASHTO T 99 (Method C)", and in the second sentence change "AASHTO T 224" to "Illinois Modified AASHTO T 99 (Annex A1)".

Page 155 Article 311.05(a). In the second line of the sixth paragraph change "AASHTO T 191" to "Illinois Modified AASHTO T 191".

Page 163 Article 351.05(a). In the second sentence of the fifth paragraph change "AASHTO T 99 (Method C)" to "Illinois Modified AASHTO T 99 (Method C)", and in the third sentence change "AASHTO T 224" to "Illinois Modified AASHTO T 99 (Annex A1)".

Page 163 Article 351.05(a). In the second line of the sixth paragraph change "AASHTO T 191" to "Illinois Modified AASHTO T 191".

Page 169 Article 352.11. In the second sentence of the fourth paragraph change "AASHTO T 191" to "Illinois Modified AASHTO T 191", and in the third sentence change "AASHTO T 134 (Method B)" to "Illinois Modified AASHTO T 134 (Method B)".

Page 169 Article 352.12. In the first sentence of the first paragraph change "AASHTO T 22" to "Illinois Modified AASHTO T 22", and in the second sentence change "AASHTO T 134 (Method B)" to "Illinois Modified AASHTO T 134 (Method B)".

Page 196 Article 406.07(a). After the footnotes in Table 1 - Minimum Roller Requirements for HMA add the following:

"EQUIPMENT DEFINITION

$V_s$ - Vibratory roller, static mode, minimum 125 lb/in. (2.2 kg/mm) of roller width. Maximum speed = 3 mph (5 km/h) or 264 ft/min (80 m/min). If the vibratory roller does not eliminate roller marks, its use shall be discontinued and a tandem roller, adequately ballasted to remove roller marks, shall be used.

$V_D$ - Vibratory roller, dynamic mode, operated at a speed to produce not less than 10 impacts/ft (30 impacts/m).

P - Pneumatic-tired roller, max. speed 3 1/2 mph (5.5 km/h) or 308 ft/min (92 m/min). The pneumatic-tired roller shall have a minimum tire pressure of 80 psi (550 kPa) and shall be equipped with heat retention shields. The self-propelled pneumatic-tired roller shall develop a compression of not less than 300 lb (53 N) nor more than 500 lb (88 N) per in. (mm) of width of the tire tread in contact with the HMA surface.

$T_B$ - Tandem roller for breakdown rolling, 8 to 12 tons (7 to 11 metric tons), 250 to 400 lb/in. (44 to 70 N/mm) of roller width, max. speed = 3 1/2 mph (5.5 km/h) or 308 ft/min (92 m/min).

$T_F$ - Tandem roller for final rolling, 200 to 400 lb/in. (35 to 70 N/mm) of roller width with minimum roller width of 50 in. (1.25 m). Ballast shall be increased if roller marks are not eliminated. Ballast shall be decreased if the mat shoves or distorts.

3W- Three wheel roller, max. speed = 3 mph (5 km/h) or 264 ft/min (80 m/min), 300 to 400 lb/in. (53 to 70 N/mm) of roller width. The three-wheel roller shall weigh 10 to 12 tons (9 to 11 metric tons)."

Page 331 Article 505.04(p). Under Range of Clearance in the first table change "in. x $10^{-6}$" to "in. x $10^{-3}$".

Page 444 Article 542.03. In the Notes in Table IIIB add "CPP Corrugated Polypropylene (CPP) pipe with smooth interior".

Page 445 Article 542.03. In the fourth column in Table IIIB (metric) change the heading for Type 5 pipe from "CPE" to "CPP".

Page 445 Article 542.03. In the Notes in Table IIIB (metric) change "PE Polyethylene (PE) pipe with a smooth interior" to "CPP Corrugated Polypropylene (CPP) pipe with smooth interior".

Page 449 Article 542.04(f)(2). In the third line of the second paragraph change "AASHTO T 99 (Method C)" to "Illinois Modified AASHTO T 99 (Method C)".

Page 544 Article 639.03. In the first sentence of the first paragraph change "AASHTO Standard Specifications for Structural Supports for Highway Signs, Luminaires, Traffic Signals," to "AASHTO "LRFD Specifications for Structural Supports for Highway Signs, Luminaires, and Traffic Signals,"".

Page 546 Article 640.03. In the first sentence of the first paragraph change "AASHTO Standard Specifications for Structural Supports for Highway Signs, Luminaires, and Traffic Signals" to "AASHTO "LRFD Specifications for Structural Supports for Highway Signs, Luminaires, and Traffic Signals"".

Page 548 Article 641.03. In the first sentence of the first paragraph change "AASHTO Standard Specifications for Structural Supports for Highway Signs, Luminaire and Traffic Signals," to "AASHTO "LRFD Specifications for Structural Supports for Highway Signs, Luminaires, and Traffic Signals,"".

Page 621 Article 727.03. In the first sentence of the third paragraph change "AASHTO Standard Specifications for Structural Supports for Highway Signs, Luminaires and Traffic Signals" to "AASHTO "LRFD Specifications for Structural Supports for Highway Signs, Luminaires, and Traffic Signals"".

Page 629 Article 734.03(a). In the fourth line of the second paragraph change "AASHTO T 99 (Method C)" to "Illinois Modified AASHTO T 99 (Method C)".

Page 649 Article 801.02. In the first sentence of the first paragraph change "AASHTO's Standard Specifications for Structural Supports for Highway Signs, Luminaires, and Traffic Signals" to "AASHTO "LRFD Specifications for Structural Supports for Highway Signs, Luminaires, and Traffic Signals"".

Page 742 Article 1003.04(c). Under Gradation in the table change "(see Article 1003.02(c))" to "(see Article 1003.01(c))".

Page 755 Article 1004.03(b). Revise the third sentence of the first paragraph to read "For Class A (seal or cover coat), and other binder courses, the coarse aggregate shall be Class C quality or better.".

Page 809 Article 1020.04(e). In the third line of the first paragraph change "ITP SCC-3" to "ITP SCC-4".

Page 945 Article 1069.05. In the first sentence of the tenth paragraph change ""Standard Specifications for Structural Supports for Highway Signs, Luminaires, and Traffic Signals"" to "AASHTO "LRFD Specifications for Structural Supports for Highway Signs, Luminaires, and Traffic Signals"".

Page 961 Article 1070.04(b)(1). In the third sentence of the first paragraph change ""Standard Specifications of Structural Supports for Highway Signs, Luminaires and Traffic Signals" published by AASHTO" to "AASHTO "LRFD Specifications for Structural Supports for Highway Signs, Luminaires, and Traffic Signals"".

Page 989 Article 1077.01. In the second sentence of the first paragraph change "Standard Specifications for Structural Supports for Highway Signs, Luminaires, and Traffic Signals, as published by AASHTO" to "AASHTO "LRFD Specifications for Structural Supports for Highway Signs, Luminaires, and Traffic Signals"".

Page 1121 Article 1103.13(a). In the first line of the first paragraph change "Bridge Deck Approach Slabs." to "Bridge Deck and Approach Slabs.".

80364

## HOT-MIX ASPHALT - DENSITY TESTING OF LONGITUDINAL JOINTS (BDE)

Effective: January 1, 2010
Revised: April 1, 2016

Description. This work shall consist of testing the density of longitudinal joints as part of the quality control/quality assurance (QC/QA) of hot-mix asphalt (HMA). Work shall be according to Section 1030 of the Standard Specifications except as follows.

Quality Control/Quality Assurance (QC/QA). Delete the second and third sentence of the third paragraph of Article 1030.05(d)(3) of the Standard Specifications.

Add the following paragraphs to the end of Article 1030.05(d)(3) of the Standard Specifications:

"Longitudinal joint density testing shall be performed at each random density test location. Longitudinal joint testing shall be located at a distance equal to the lift thickness or a minimum of 4 in. (100 mm), from each pavement edge. (i.e. for a 5 in. (125 mm) lift the near edge of the density gauge or core barrel shall be within 5 in. (125 mm) from the edge of pavement.) Longitudinal joint density testing shall be performed using either a correlated nuclear gauge or cores.

a. Confined Edge. Each confined edge density shall be represented by a one-minute nuclear density reading or a core density and shall be included in the average of density readings or core densities taken across the mat which represents the Individual Test.

b. Unconfined Edge. Each unconfined edge joint density shall be represented by an average of three one-minute density readings or a single core density at the given density test location and shall meet the density requirements specified herein. The three one-minute readings shall be spaced 10 ft (3 m) apart longitudinally along the unconfined pavement edge and centered at the random density test location."

Revise the Density Control Limits table in Article 1030.05(d)(4) of the Standard Specifications to read:

| "Mixture Composition | Parameter | Individual Test (includes confined edges) | Unconfined Edge Joint Density Minimum |
|---|---|---|---|
| IL-4.75 | Ndesign = 50 | 93.0 – 97.4% [1/] | 91.0% |
| IL-9.5 | Ndesign = 90 | 92.0 – 96.0% | 90.0% |
| IL-9.5,IL-9.5L | Ndesign < 90 | 92.5 – 97.4% | 90.0% |
| IL-19.0 | Ndesign = 90 | 93.0 – 96.0% | 90.0% |
| IL-19.0, IL-19.0L | Ndesign < 90 | 93.0 [2/]– 97.4% | 90.0% |
| SMA | Ndesign = 50 & 80 | 93.5 – 97.4% | 91.0%" |

80246

## RECLAIMED ASPHALT PAVEMENT AND RECLAIMED ASPHALT SHINGLES (BDE)

Effective: November 1, 2012
Revise: April 1, 2016

Revise Section 1031 of the Standard Specifications to read:

### "SECTION 1031. RECLAIMED ASPHALT PAVEMENT AND RECLAIMED ASPHALT SHINGLES

**1031.01 Description.** Reclaimed asphalt pavement and reclaimed asphalt shingles shall be according to the following.

(a) Reclaimed Asphalt Pavement (RAP). RAP is the material produced by cold milling or crushing an existing hot-mix asphalt (HMA) pavement. The Contractor shall supply written documentation that the RAP originated from routes or airfields under federal, state, or local agency jurisdiction.

(b) Reclaimed Asphalt Shingles (RAS). Reclaimed asphalt shingles (RAS). RAS is from the processing and grinding of preconsumer or post-consumer shingles. RAS shall be a clean and uniform material with a maximum of 0.5 percent unacceptable material, as defined in Bureau of Materials and Physical Research Policy Memorandum, "Reclaimed Asphalt Shingle (RAS) Sources", by weight of RAS. All RAS used shall come from a Bureau of Materials and Physical Research approved processing facility where it shall be ground and processed to 100 percent passing the 3/8 in. (9.5 mm) sieve and 93 percent passing the #4 (4.75 mm) sieve based on a dry shake gradation. RAS shall be uniform in gradation and asphalt binder content and shall meet the testing requirements specified herein. In addition, RAS shall meet the following Type 1 or Type 2 requirements.

(1) Type 1. Type 1 RAS shall be processed, preconsumer asphalt shingles salvaged from the manufacture of residential asphalt roofing shingles.

(2) Type 2. Type 2 RAS shall be processed post-consumer shingles only, salvaged from residential, or four unit or less dwellings not subject to the National Emission Standards for Hazardous Air Pollutants (NESHAP).

**1031.02 Stockpiles.** RAP and RAS stockpiles shall be according to the following.

(a) RAP Stockpiles. The Contractor shall construct individual, sealed RAP stockpiles meeting one of the following definitions. No additional RAP shall be added to the pile after the pile has been sealed. Stockpiles shall be sufficiently separated to prevent intermingling at the base. Stockpiles shall be identified by signs indicating the type as listed below (i.e. "Homogeneous Surface").

Prior to milling, the Contractor shall request the District provide documentation on the quality of the RAP to clarify the appropriate stockpile.

(1) Fractionated RAP (FRAP). FRAP shall consist of RAP from Class I, HMA (High and Low ESAL) mixtures. The coarse aggregate in FRAP shall be crushed aggregate and may represent more than one aggregate type and/or quality, but shall be at least C quality. All FRAP shall be fractionated prior to testing by screening into a minimum of two size fractions with the separation occurring on or between the #4 (4.75 mm) and 1/2 in. (12.5 mm) sieves. Agglomerations shall be minimized such that 100 percent of the RAP shall pass the sieve size specified below for the mix into which the FRAP will be incorporated.

| Mixture FRAP will be used in: | Sieve Size that 100 % of FRAP Shall Pass |
|---|---|
| IL-19.0 | 1 1/2 in. (40 mm) |
| IL-9.5 | 3/4 in. (20 mm) |
| IL-4.75 | 1/2 in. (13 mm) |

(2) Homogeneous. Homogeneous RAP stockpiles shall consist of RAP from Class I, HMA (High and Low ESAL) mixtures and represent: 1) the same aggregate quality, but shall be at least C quality; 2) the same type of crushed aggregate (either crushed natural aggregate, ACBF slag, or steel slag); 3) similar gradation; and 4) similar asphalt binder content. If approved by the Engineer, combined single pass surface/binder millings may be considered "homogeneous" with a quality rating dictated by the lowest coarse aggregate quality present in the mixture.

(3) Conglomerate. Conglomerate RAP stockpiles shall consist of RAP from Class I, HMA (High and Low ESAL) mixtures. The coarse aggregate in this RAP shall be crushed aggregate and may represent more than one aggregate type and/or quality, but shall be at least C quality. This RAP may have an inconsistent gradation and/or asphalt binder content prior to processing. All conglomerate RAP shall be processed prior to testing by crushing to where all RAP shall pass the 5/8 in. (16 mm) or smaller screen. Conglomerate RAP stockpiles shall not contain steel slag.

(4) Non-Quality. RAP stockpiles that do not meet the requirements of the stockpile categories listed above shall be classified as "Non-Quality".

RAP/FRAP containing contaminants, such as earth, brick, sand, concrete, sheet asphalt, bituminous surface treatment (i.e. chip seal), pavement fabric, joint sealants, etc., will be unacceptable unless the contaminants are removed to the satisfaction of the Engineer. Sheet asphalt shall be stockpiled separately.

(b) RAS Stockpiles. Type 1 and Type 2 RAS shall be stockpiled separately and shall not be intermingled. Each stockpile shall be signed indicating what type of RAS is present.

Unless otherwise specified by the Engineer, mechanically blending manufactured sand (FM 20 or FM 22) up to an equal weight of RAS with the processed RAS will be permitted to improve workability. The sand shall be "B Quality" or better from an approved Aggregate Gradation Control System source. The sand shall be accounted for in the mix design and during HMA production.

Records identifying the shingle processing facility supplying the RAS, RAS type, and lot number shall be maintained by project contract number and kept for a minimum of three years.

**1031.03 Testing.** RAP/FRAP and RAS testing shall be according to the following.

(a) RAP/FRAP Testing. When used in HMA, the RAP/FRAP shall be sampled and tested either during or after stockpiling.

(1) During Stockpiling. For testing during stockpiling, washed extraction samples shall be run at the minimum frequency of one sample per 500 tons (450 metric tons) for the first 2000 tons (1800 metric tons) and one sample per 2000 tons (1800 metric tons) thereafter. A minimum of five tests shall be required for stockpiles less than 4000 tons (3600 metric tons).

(2) After Stockpiling. For testing after stockpiling, the Contractor shall submit a plan for approval to the District proposing a satisfactory method of sampling and testing the RAP/FRAP pile either in-situ or by restockpiling. The sampling plan shall meet the minimum frequency required above and detail the procedure used to obtain representative samples throughout the pile for testing.

Each sample shall be split to obtain two equal samples of test sample size. One of the two test samples from the final split shall be labeled and stored for Department use. The Contractor shall extract the other test sample according to Department procedure. The Engineer reserves the right to test any sample (split or Department-taken) to verify Contractor test results.

(b) RAS Testing. RAS or RAS blended with manufactured sand shall be sampled and tested during stockpiling according to Bureau of Materials and Physical Research Policy Memorandum, "Reclaimed Asphalt Shingle (RAS) Source".

Samples shall be collected during stockpiling at the minimum frequency of one sample per 200 tons (180 metric tons) for the first 1000 tons (900 metric tons) and one sample per 250 tons (225 metric tons) thereafter. A minimum of five samples are required for stockpiles less than 1000 tons (900 metric tons). Once a ≤ 1000 ton (900 metric ton), five-sample/test stockpile has been established it shall be sealed. Additional incoming RAS or RAS blended with manufactured sand shall be stockpiled in a separate working pile as designated in the Quality Control plan and only added to the sealed stockpile when the test results of the working pile are complete and are found to meet the tolerances specified herein for the original sealed RAS stockpile.

Before testing, each sample shall be split to obtain two test samples. One of the two test samples from the final split shall be labeled and stored for Department use. The Contractor shall perform a washed extraction and test for unacceptable materials on the other test sample according to Department procedures. The Engineer reserves the right to test any sample (split or Department-taken) to verify Contractor test results.

If the sampling and testing was performed at the shingle processing facility in accordance with the QC Plan, the Contractor shall obtain and make available all of the test results from start of the initial stockpile.

**1031.04 Evaluation of Tests.** Evaluation of test results shall be according to the following.

(a) Evaluation of RAP/FRAP Test Results. All of the extraction results shall be compiled and averaged for asphalt binder content and gradation, and when applicable $G_{mm}$. Individual extraction test results, when compared to the averages, will be accepted if within the tolerances listed below.

| Parameter | FRAP/Homogeneous/ Conglomerate |
|---|---|
| 1 in. (25 mm) | |
| 1/2 in. (12.5 mm) | ± 8 % |
| No. 4 (4.75 mm) | ± 6 % |
| No. 8 (2.36 mm) | ± 5 % |
| No. 16 (1.18 mm) | |
| No. 30 (600 µm) | ± 5 % |
| No. 200 (75 µm) | ± 2.0 % |
| Asphalt Binder | ± 0.4 % 1/ |
| $G_{mm}$ | ± 0.03 |

1/ The tolerance for FRAP shall be ± 0.3 %.

If more than 20 percent of the individual sieves and/or asphalt binder content tests are out of the above tolerances, the RAP/FRAP shall not be used in HMA unless the RAP/FRAP representing the failing tests is removed from the stockpile. All test data and acceptance ranges shall be sent to the District for evaluation.

With the approval of the Engineer, the ignition oven may be substituted for extractions according to the ITP, "Calibration of the Ignition Oven for the Purpose of Characterizing Reclaimed Asphalt Pavement (RAP)".

(b) Evaluation of RAS and RAS Blended with Manufactured Sand Test Results. All of the test results, with the exception of percent unacceptable materials, shall be compiled and averaged for asphalt binder content and gradation. Individual test results, when compared to the averages, will be accepted if within the tolerances listed below.

| Parameter | RAS |
|---|---|
| No. 8 (2.36 mm) | ± 5 % |
| No. 16 (1.18 mm) | ± 5 % |
| No. 30 (600 µm) | ± 4 % |
| No. 200 (75 µm) | ± 2.0 % |
| Asphalt Binder Content | ± 1.5 % |

If more than 20 percent of the individual sieves and/or asphalt binder content tests are out of the above tolerances, or if the percent unacceptable material exceeds 0.5 percent by weight of material retained on the # 4 (4.75 mm) sieve, the RAS or RAS blend shall not be used in Department projects. All test data and acceptance ranges shall be sent to the District for evaluation.

**1031.05 Quality Designation of Aggregate in RAP/FRAP.**

(a) RAP. The aggregate quality of the RAP for homogeneous and conglomerate stockpiles shall be set by the lowest quality of coarse aggregate in the RAP stockpile and are designated as follows.

(1) RAP from Class I, Superpave/HMA (High ESAL), or (Low ESAL) IL-9.5L surface mixtures are designated as containing Class B quality coarse aggregate.

(2) RAP from Class I binder, Superpave/HMA (High ESAL) binder, or (Low ESAL) IL-19.0L binder mixtures are designated as containing Class C quality coarse aggregate.

(b) FRAP. If the Engineer has documentation of the quality of the FRAP aggregate, the Contractor shall use the assigned quality provided by the Engineer.

If the quality is not known, the quality shall be determined as follows. Coarse and fine FRAP stockpiles containing plus #4 (4.75 mm) sieve coarse aggregate shall have a maximum tonnage of 5000 tons (4500 metric tons). The Contractor shall obtain a representative sample witnessed by the Engineer. The sample shall be a minimum of 50 lb (25 kg). The sample shall be extracted according to Illinois Modified AASHTO T 164 by a consultant laboratory prequalified by the Department for the specified testing. The consultant laboratory shall submit the test results along with the recovered aggregate to the District Office. The cost for this testing shall be paid by the Contractor. The District will forward the sample to the Bureau of Materials and Physical Research Aggregate Lab for MicroDeval Testing, according to ITP 327. A maximum loss of 15.0 percent will be applied for all HMA applications.

**1031.06 Use of RAP/FRAP and/or RAS in HMA.** The use of RAP/FRAP and/or RAS shall be the Contractor's option when constructing HMA in all contracts.

(a) RAP/FRAP. The use of RAP/FRAP in HMA shall be as follows.

(1) Coarse Aggregate Size. The coarse aggregate in all RAP shall be equal to or less than the nominal maximum size requirement for the HMA mixture to be produced.

(2) Steel Slag Stockpiles. Homogeneous RAP stockpiles containing steel slag will be approved for use in all HMA (High ESAL and Low ESAL) Surface and Binder Mixture applications.

(3) Use in HMA Surface Mixtures (High and Low ESAL). RAP/FRAP stockpiles for use in HMA surface mixtures (High and Low ESAL) shall be FRAP or homogeneous in which the coarse aggregate is Class B quality or better. RAP/FRAP from Conglomerate stockpiles shall be considered equivalent to limestone for frictional considerations. Known frictional contributions from plus #4 (4.75 mm) homogeneous RAP and FRAP stockpiles will be accounted for in meeting frictional requirements in the specified mixture.

(4) Use in HMA Binder Mixtures (High and Low ESAL), HMA Base Course, and HMA Base Course Widening. RAP/FRAP stockpiles for use in HMA binder mixtures (High and Low ESAL), HMA base course, and HMA base course widening shall be FRAP, homogeneous, or conglomerate, in which the coarse aggregate is Class C quality or better.

(5) Use in Shoulders and Subbase. RAP/FRAP stockpiles for use in HMA shoulders and stabilized subbase (HMA) shall be FRAP, homogeneous, or conglomerate.

(6) When the Contractor chooses the RAP option, the percentage of RAP shall not exceed the amounts indicated in Article 1031.06(c)(1) below for a given Ndesign.

(b) RAS. RAS meeting Type 1 or Type 2 requirements will be permitted in all HMA applications as specified herein.

(c) RAP/FRAP and/or RAS Usage Limits. Type 1 or Type 2 RAS may be used alone or in conjunction with RAP or FRAP in HMA mixtures up to a maximum of 5.0 percent by weight of the total mix.

(1) RAP/RAS. When RAP is used alone or RAP is used in conjunction with RAS, the percentage of virgin asphalt binder replacement shall not exceed the amounts listed in the Max RAP/RAS ABR table listed below for the given Ndesign.

**RAP/RAS Maximum Asphalt Binder Replacement (ABR) Percentage**

| HMA Mixtures 1/, 2/ | RAP/RAS Maximum ABR % | | |
|---|---|---|---|
| Ndesign | Binder/Leveling Binder | Surface | Polymer Modified |
| 30 | 30 | 30 | 10 |

| | | | |
|---|---|---|---|
| 50 | 25 | 15 | 10 |
| 70 | 15 | 10 | 10 |
| 90 | 10 | 10 | 10 |

1/ For Low ESAL HMA shoulder and stabilized subbase, the RAP/RAS ABR shall not exceed 50 percent of the mixture.

2/ When RAP/RAS ABR exceeds 20 percent, the high and low virgin asphalt binder grades shall each be reduced by one grade (i.e. 25 percent ABR would require a virgin asphalt binder grade of PG 64-22 to be reduced to a PG 58-28). If warm mix asphalt (WMA) technology is utilized and production temperatures do not exceed 275 °F (135 °C), the high and low virgin asphalt binder grades shall each be reduced by one grade when RAP/RAS ABR exceeds 25 percent (i.e. 26 percent RAP/RAS ABR would require a virgin asphalt binder grade of PG 64-22 to be reduced to a PG 58-28).

(2) FRAP/RAS. When FRAP is used alone or FRAP is used in conjunction with RAS, the percentage of virgin asphalt binder replacement shall not exceed the amounts listed in the FRAP/RAS table listed below for the given Ndesign.

**FRAP/RAS Maximum Asphalt Binder Replacement (ABR) Percentage**

| HMA Mixtures 1/, 2/ | FRAP/RAS Maximum ABR % | | |
|---|---|---|---|
| Ndesign | Binder/Leveling Binder | Surface | Polymer Modified 3/, 4/ |
| 30 | 50 | 40 | 10 |
| 50 | 40 | 35 | 10 |
| 70 | 40 | 30 | 10 |
| 90 | 40 | 30 | 10 |

1/ For Low ESAL HMA shoulder and stabilized subbase, the FRAP/RAS ABR shall not exceed 50 percent of the mixture.

2/ When FRAP/RAS ABR exceeds 20 percent for all mixes, the high and low virgin asphalt binder grades shall each be reduced by one grade (i.e. 25 percent ABR would require a virgin asphalt binder grade of PG 64-22 to be reduced to a PG 58-28). If warm mix asphalt (WMA) technology is utilized and production temperatures do not exceed 275 °F (135 °C), the high and low virgin asphalt binder grades shall each be reduced by one grade when FRAP/RAS ABR exceeds 25 percent (i.e. 26 percent ABR would require a virgin asphalt binder grade of PG 64-22 to be reduced to a PG 58-28).

3/ For SMA the FRAP/RAS ABR shall not exceed 20 percent.

4/ For IL-4.75 mix the FRAP/RAS ABR shall not exceed 30 percent.

**1031.07 HMA Mix Designs.** At the Contractor's option, HMA mixtures may be constructed utilizing RAP/FRAP and/or RAS material meeting the detailed requirements specified herein.

(a) RAP/FRAP and/or RAS. RAP/FRAP and/or RAS mix designs shall be submitted for verification. If additional RAP/FRAP and/or RAS stockpiles are tested and found that no more than 20 percent of the results, as defined under "Testing" herein, are outside of the control tolerances set for the original RAP/FRAP and/or RAS stockpile and HMA mix design, and meets all of the requirements herein, the additional RAP/FRAP and/or RAS stockpiles may be used in the original mix design at the percent previously verified.

(b) RAS. Type 1 and Type 2 RAS are not interchangeable in a mix design. A RAS stone bulk specific gravity (Gsb) of 2.300 shall be used for mix design purposes.

**1031.08 HMA Production.** HMA production utilizing RAP/FRAP and/or RAS shall be as follows.

(a) RAP/FRAP. The coarse aggregate in all RAP/FRAP used shall be equal to or less than the nominal maximum size requirement for the HMA mixture being produced.

To remove or reduce agglomerated material, a scalping screen, gator, crushing unit, or comparable sizing device approved by the Engineer shall be used in the RAP feed system to remove or reduce oversized material. If material passing the sizing device adversely affects the mix production or quality of the mix, the sizing device shall be set at a size specified by the Engineer.

If the RAP/FRAP control tolerances or QC/QA test results require corrective action, the Contractor shall cease production of the mixture containing RAP/FRAP and either switch to the virgin aggregate design or submit a new RAP/FRAP design.

(b) RAS. RAS shall be incorporated into the HMA mixture either by a separate weight depletion system or by using the RAP weigh belt. Either feed system shall be interlocked with the aggregate feed or weigh system to maintain correct proportions for all rates of production and batch sizes. The portion of RAS shall be controlled accurately to within ± 0.5 percent of the amount of RAS utilized. When using the weight depletion system, flow indicators or sensing devices shall be provided and interlocked with the plant controls such that the mixture production is halted when RAS flow is interrupted.

(c) RAP/FRAP and/or RAS. HMA plants utilizing RAP/FRAP and/or RAS shall be capable of automatically recording and printing the following information.

(1) Dryer Drum Plants.

a. Date, month, year, and time to the nearest minute for each print.

b. HMA mix number assigned by the Department.

c. Accumulated weight of dry aggregate (combined or individual) in tons (metric tons) to the nearest 0.1 ton (0.1 metric ton).

d. Accumulated dry weight of RAP/FRAP/RAS in tons (metric tons) to the nearest 0.1 ton (0.1 metric ton).

e. Accumulated mineral filler in revolutions, tons (metric tons), etc. to the nearest 0.1 unit.

f. Accumulated asphalt binder in gallons (liters), tons (metric tons), etc. to the nearest 0.1 unit.

g. Residual asphalt binder in the RAP/FRAP material as a percent of the total mix to the nearest 0.1 percent.

h. Aggregate and RAP/FRAP moisture compensators in percent as set on the control panel. (Required when accumulated or individual aggregate and RAP/FRAP are printed in wet condition.)

(2) Batch Plants.

a. Date, month, year, and time to the nearest minute for each print.

b. HMA mix number assigned by the Department.

c. Individual virgin aggregate hot bin batch weights to the nearest pound (kilogram).

d. Mineral filler weight to the nearest pound (kilogram).

e. RAP/FRAP/RAS weight to the nearest pound (kilogram).

f. Virgin asphalt binder weight to the nearest pound (kilogram).

g. Residual asphalt binder in the RAP/FRAP/RAS material as a percent of the total mix to the nearest 0.1 percent.

The printouts shall be maintained in a file at the plant for a minimum of one year or as directed by the Engineer and shall be made available upon request. The printing system will be inspected by the Engineer prior to production and verified at the beginning of each construction season thereafter.

**1031.09 RAP in Aggregate Surface Course and Aggregate Wedge Shoulders, Type B.** The use of RAP in aggregate surface course (temporary access entrances only) and aggregate wedge shoulders, Type B shall be as follows.

(a) Stockpiles and Testing. RAP stockpiles may be any of those listed in Article 1031.02, except "Non-Quality" and "FRAP". The testing requirements of Article 1031.03 shall not apply. RAP used shall be according to the current Bureau of Materials and Physical Research Policy Memorandum, "Reclaimed Asphalt Pavement (RAP) for Aggregate Applications".

(b) Gradation. One hundred percent of the RAP material shall pass the 1 1/2 in. (37.5 mm) sieve. The RAP material shall be reasonably well graded from coarse to fine. RAP material that is gap-graded or single sized will not be accepted."

80306

State of Illinois
Department of Transportation
Bureau of Local Roads and Streets

# SPECIAL PROVISION FOR INSURANCE

Effective: February 1, 2007
Revised: August 1, 2007

All references to Sections or Articles in this specification shall be construed to mean specific Section or Article of the Standard Specifications for Road and Bridge Construction, adopted by the Department of Transportation.

The Contractor shall name the following entities as additional insured under the Contractor's general liability insurance policy in accordance with Article 107.27:

Tazewell County

Morton Road District

Village of Morton

The entities listed above and their officers, employees, and agents shall be indemnified and held harmless in accordance with Article 107.26.

State of Illinois
Department of Transportation
Bureau of Local Roads and Streets

# SPECIAL PROVISION
# FOR
# EQUIPMENT RENTAL RATES

Effective: January 1, 2012

All references to Sections or Articles in this specification shall be construed to mean a specific Section or Article of the Standard Specifications for Road and Bridge Construction, adopted by the Department of Transportation.

Replace Article 109.04(b)(4) with the following:

"(4) Equipment. For any machinery or special equipment (other than small tools) the use of which has been authorized by the Engineer, the Contractor will be paid according to the latest revision of “SCHEDULE OF AVERAGE ANNUAL EQUIPMENT OWNERSHIP EXPENSE” and latest index factor as issued by the Illinois Department of Transportation. The equipment should be of a type and size reasonably required to complete the extra work.”

State of Illinois
DEPARTMENT OF TRANSPORTATION
Bureau of Local Roads & Streets

# SPECIAL PROVISION FOR GROWTH CURVE

Effective: March 1, 2008
Revised: January 1, 2010

All references to Sections and Articles in this Special Provision shall be construed to mean specific Sections and Articles in the Standard Specifications for Road and Bridge Construction adopted by the Department of Transportation.

The Contractor shall perform a growth curve at the beginning of placement of each type of mix and each lift. The growth curve for each type of mix and each lift shall be performed within the first 200 tons (180 metric tons). If an adjustment is made to the specific mix design, the Engineer reserves the right to request an additional growth curve and supporting tests at the Contractor's expense.

Compaction of the growth curve shall commence immediately after the course is placed and at a temperature of not less than 280 ºF (140 ºC). The growth curve, consisting of a plot of lb/cu ft (kg/cu m) vs. number of passes with the project breakdown roller, shall be developed. Roller speed during the growth curve testing shall be the same as the normal paving operation. This curve shall be established by use of a nuclear gauge. Tests shall be taken after each pass until the highest lb/cu ft (kg/cu m) is obtained. This value shall be the target density provided the HMA Gyratory air voids are within acceptable limits. If the HMA Gyratory air voids are not within the specified limits, corrective action shall be taken, and a new target density shall be established.

A new growth curve is required if the breakdown roller used on the growth curve is replaced with a new roller during production. The target density shall apply only to the specific gauge used. If additional gauges are to be used to determine density specification compliance, the Contractor shall establish a unique minimum allowable target density from the growth curve location for each gauge.

At least one core sample per day shall be taken at a location specified by the Engineer. Core densities will be determined using the Illinois-Modified AASHTO T 166 or T 275 procedure by the Department. The core density shall be according to Articles 1030.05(d)(4) and (d)(7). The QA Manager is responsible for assuring and documenting that the determined number of roller passes has been accomplished. The Engineer reserves the right to take core samples at any time to verify density from the nuclear gauge,

All lifts and confined longitudinal joint edges shall be compacted to an average nuclear gauge density of not less than 95 percent nor greater than 102 percent of the target density obtained on the growth curve. Unconfined longitudinal joint edges shall be compacted to an average nuclear gauge density of not less than 93 percent nor greater than 102 percent of the target density obtained on the growth curve. The average nuclear gauge density shall be based on tests representing one day's production.

Quality Control density tests shall be performed at randomly selected locations within 1/2 mile (800 m) intervals per lift per lane. In no case shall more than one half day's production be completed without density testing being performed. Longitudinal joint density testing shall be performed at each random density test location. Longitudinal joint testing shall be located at a distance equal to the lift thickness or a minimum of 2 in. (50 mm) from each pavement edge.

If the Contractor is not controlling the compaction process and is making no effort to take corrective action, the operation shall stop as directed by the Engineer.

State of Illinois
DEPARTMENT OF TRANSPORTATION
Bureau of Local Roads & Streets

# SPECIAL PROVISION FOR EMULSIFIED ASPHALTS

Effective: January 1, 2007
Revised: February 7, 2008

All references to Sections and Articles in this Special Provision shall be construed to mean specific Sections and Articles in the Standard Specifications for Road and Bridge Construction adopted by the Department of Transportation.

Replace the table after Note 2 in Article 403.02 with the following:

| Type of Construction | Bituminous Materials Recommended for Weather Conditions Indicated | |
|---|---|---|
| | Warm<br>[15 °C to 30 °C]*<br>[(60 °F to 85 °F)]* | Hot<br>[30 °C Plus]*<br>[(85 °F Plus)]* |
| Prime | MC-30, PEP | MC-30, PEP |
| Cover Coat and Seal Coat | RS-2, CRS-2, RC-800, RC-3000, MC-800, MC-3000, SC-3000, HFE-90, HFE-150, HFE-300, HFRS-2, PEA** | RS-2, CRS-2, RC-800, RC-3000, MC-800, MC-3000, SC-3000, PG46-28, PG52-28, HFE-90, HFE-150, HFE-300, HFRS-2, PEA** |

* Temperature of the air in the shade at the time of application.
** PEA is only allowed on roads with low traffic volumes

Replace the table after Note 2 in Article 406.02 with the following:

| Type of Construction | Bituminous Materials Recommended |
|---|---|
| Prime (tack) on Brick, Concrete, or Bituminous Bases (Note 3) | SS-1, SS-1h, CSS-1, CSS-1h, HFE-90, RC-70 |
| Prime on Aggregate Bases (Note 4) | MC-30, PEP |
| Mixture for Cracks, Joints, and Flangeways | PG58-22, PG64-22 |

Note 3. When emulsified asphalts are used, they shall be diluted with an equal volume of potable water. HFE emulsions shall be diluted by the manufacturer. The diluted material shall be thoroughly agitated within 24 hours of application and show no separation of water and emulsion. The diluted material shall not be returned to an approved emulsion storage tank.

Note 4. Preparation of the bituminous PEP shall be as specified in Article 403.05.

Replace the table in Article 1032.04 with the following:

| Spraying Application Temperature Ranges | | |
|---|---|---|
| Type and Grade of Bituminous Material | Temperature Ranges | |
| | °F min. - max. | °C min. - max. |
| PEP | 60 - 130 | 15 - 55 |
| PEA | 140 - 190 | 60 -88 |
| MC-30 | 85 - 190 | 30 - 90 |
| MC-70, RC-70, SC-70 | 120 - 225 | 50 - 105 |
| MC-250, SC-250 | 165 - 270 | 75 - 130 |
| MC-800, SC-800 | 200 - 305 | 95 - 150 |
| MC-3000, SC-3000 | 230 - 345 | 110 - 175 |
| PG46-28 | 275 - 385 | 135 - 195 |
| PG52-28 | 285 - 395 | 140 - 200 |
| RS-2, CRS-2 | 110 - 160 | 45 - 70 |
| SS-1, SS-1h, CSS-1, CSS-1h | 75 - 130 | 25 - 55 |
| SS-1hP, CSS-1hP | 75 - 130 | 25 - 55 |
| HFE-90, HFE-150, HFE-300 | 150 - 180 | 65 - 80 |
| HFP, CRSP, HFRS-2 | 150 - 180 | 65 - 80 |
| E-2 | 85 - 190 | 30 - 90 |
| E-3 | 120 - 225 | 50 - 105 |
| E-4 | 165 - 270 | 75 - 130 |

Add subparagraph (g) to Article 1032.06:

(g) Penetrating Emulsified Asphalt (PEA). The penetrating emulsified asphalt shall meet the following requirements when tested according to AASHTO T59:

| | | |
|---|---|---|
| Viscosity, Saybolt Fural @ 25°C (77°F), | sec: | 20 - 500 |
| Sieve Test, retained on 850 μm (No. 20) sieve, maximum, | %: | 0.10 |
| Storage Stability Test, 1 day, maximum, | %: | 1 |
| Float Test @ 60°C (140°F), minimum, | sec: | 150 |
| Stone Coating Test, 3 minutes, | : | Stone Coated Thoroughly |
| Particle Charge | : | Negative |
| pH, minimum | : | 7.3 |
| Distillation Test: | | |
| Distillation to 260°C (500°F) Residue, minimum | %: | 65 |
| Oil Distillate by Volume, maximum | %: | 3 |
| Test on residue from distillation: | | |
| Penetration @ 25°C (77°F), 100 g, 5 sec, minimum | dmm: | 300 |

Replace the last sentence and table of Article 1032.06 with the following:

The different grades are, in general, used for the following.

| Grade | Use |
|---|---|
| SS-1, SS-1h, CSS-1, CSS-1h, HFE 90, SS-1hP, CSS-1hP | Tack or fog seal |
| PEP | Bituminous surface treatment prime |
| RS-2, HFE 90, HFE 150, HFE 300, CRSP, HFP, CRS-2, HFRS-2, PEA | Bituminous surface treatment |
| CSS-1h Latex Modified | Microsurfacing |

Morton R.D.
Sec. # 16-14000-01-GM (N-MFT)
Queenwood Road
E Queenwood Rd
Tennessee Ave
N
1000 ft
Google earth
© 2016 Google

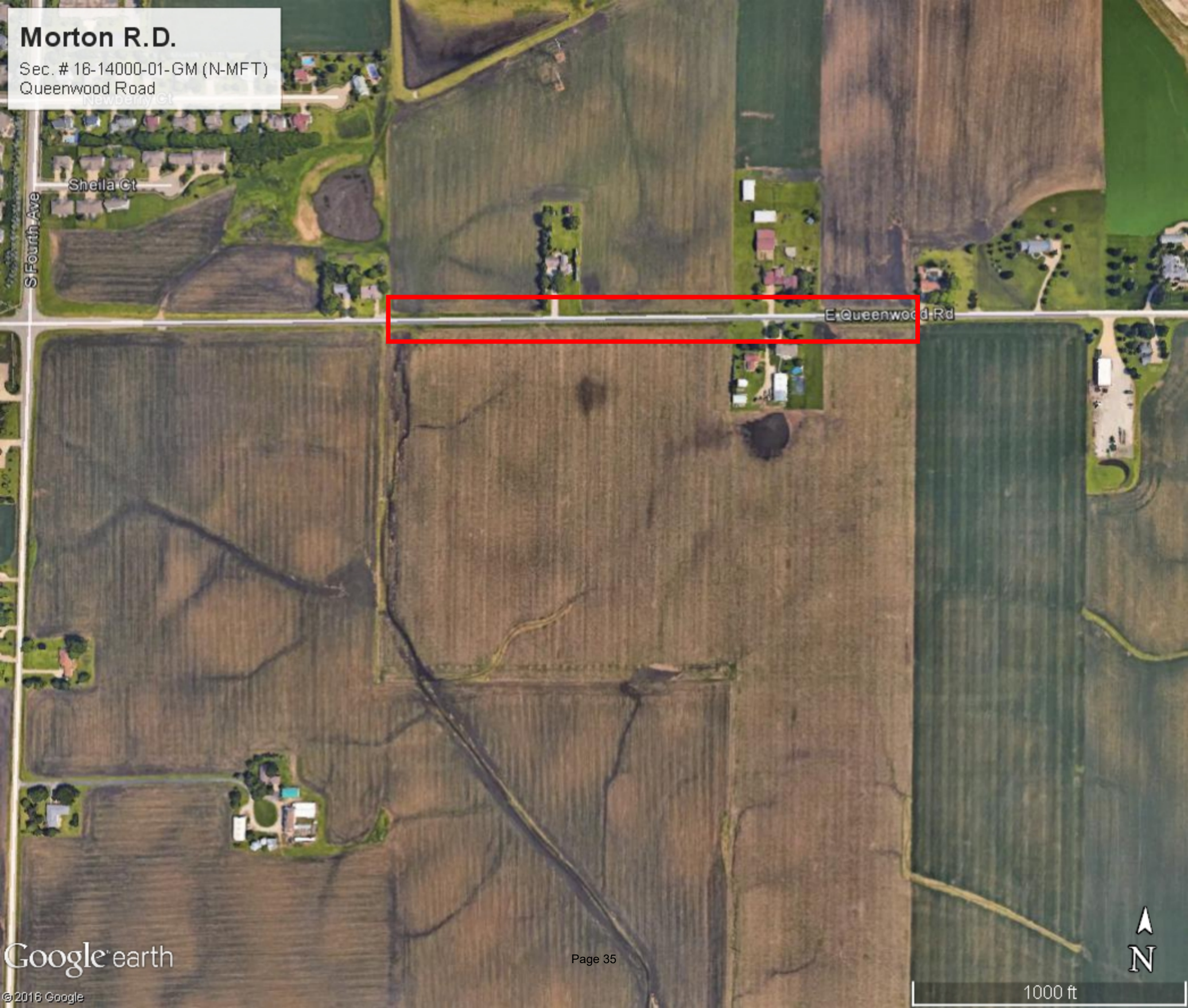
Morton R.D.
Sec. # 16-14000-01-GM (N-MFT)
Queenwood Road
Newberry Ct
Sheila Ct
S Fourth Ave
E Queenwood Rd
Google earth
© 2016 Google
N
1000 ft

Village of Morton
Queenwood Road
Newberry Ct
Sheila Ct
S Fourth Ave
E Queenwood Rd
Google earth
© 2016 Google
N
1000 ft

Morton R.D.
Sec. # 16-14000-01-GM (N-MFT)
Broadway Road
Tennessee Ave
Broadway Rd
Co Rd 1700 N
Google earth
© 2016 Google
N
1000 ft

# Quantities

| Route/Section | Length | Width | Area |
|---|---|---|---|
| Queenwood Rd. / TR 61B | 3,842 Feet | 20.5 Feet | 8,751 SQ YD |

## Hot-Mix Asphalt Surface Removal- 1.5":

Mainline 1.5":

**Total: 8,738 SQ YD**

## Hot-Mix Asphalt Surface Removal- Butt Joint:

Project Ends: 6.8 SQ YD

**Total: 7 SQ YD**

## Temporary Ramp:

**Total: 16 SQ YD**

## Polymerized Bituminous Materials (Tack Coat):

Rate = 0.45#/SY

**Total : 3,938 POUND**

## Hot-Mix Asphalt Surface Course, Mix "C", N50:

| | | |
|---|---|---|
| Mainline: 1.5" | 735 | Ton |
| Entrances, Shoulders & Mailboxes | 34 | Ton |
| **Total:** | **769** | **TON** |

## Traffic Control and Protection (Special):

*Denotes includes entire project

**Total: 1 L SUM***

# Quantities

| Route/Section | Length | Width | Area |
|---|---|---|---|
| Queenwood Rd. / TR 61B | 1,935 Feet | 20.5 Feet | 4,408 SQ YD |

## Polymerized Bituminous Materials (Tack Coat):

Rate = 0.45#/SY

**Total : 1,983 POUND**

## Hot-Mix Asphalt Surface Course, Mix "C", N50:

| | | |
|---|---|---|
| Mainline: 1.5" | 370 | Ton |
| Entrances, Shoulders & Mailboxes | 13 | Ton |
| **Total:** | **384** | **TON** |

Village of Morton
Tazewell County

## Quantities

| Route/Section | Length | Width | Area |
|---|---|---|---|
| Queenwood Rd. / TR 61B | 635 Feet | 20.5 Feet | 1,446 SQ YD |

## Polymerized Bituminous Materials (Tack Coat):

Rate = 0.45#/SY

**Total : 651 POUND**

## Hot-Mix Asphalt Surface Course, Mix "C", N50:

| | | |
|---|---|---|
| Mainline: 1.5" | 121 | Ton |
| Entrances, Shoulders & Mailboxes | 7 | Ton |
| **Total:** | **128** | **TON** |

# Quantities

| Route/Section | Length | Width | Area |
|---|---|---|---|
| Queenwood Rd. / TR 61B | 910 Feet | 21 Feet | 2,123 SQ YD |

## Hot-Mix Asphalt Surface Removal- Butt Joint:

| | | |
|---|---|---|
| Project End(70 x 21): | 163.3 | SQ YD |
| **Total:** | **163** | **SQ YD** |

## Temporary Ramp:

| | | |
|---|---|---|
| **Total:** | **8** | **SQ YD** |

## Polymerized Bituminous Materials (Tack Coat):

Rate = 0.45#/SY

| | | |
|---|---|---|
| **Total :** | **956** | **POUND** |

## Hot-Mix Asphalt Surface Course, Mix "C", N50:

| | | |
|---|---|---|
| Mainline: 1.5" | 178 | Ton |
| Entrances, Shoulders & Mailboxes | 10 | Ton |
| **Total:** | **188** | **TON** |

# Quantities

| Route/Section | Length | Width | Area |
|---|---|---|---|
| Broadway Rd. / TR 71A | 3,675 Feet | 20.5 Feet | 8,371 SQ YD |

## Hot-Mix Asphalt Surface Removal- 1.5":

Mainline 1.5":

**Total: 8,357 SQ YD**

## Hot-Mix Asphalt Surface Removal- Butt Joint:

Project Ends: 13.7 SQ YD

**Total: 14 SQ YD**

## Temporary Ramp:

**Total: 16 SQ YD**

## Polymerized Bituminous Materials (Tack Coat):

Rate = 0.45#/SY

**Total : 3,767 POUND**

## Hot-Mix Asphalt Surface Course, Mix "C", N50:

| | | |
|---|---|---|
| Mainline: 1.5" | 703 | Ton |
| Entrances & Mailboxes: 1.5" | 32 | Ton |
| **Total:** | **735** | **TON** |

# STANDARD FOR HOT-MIX ASPHALT SURFACING AT SIDEROADS, ENTRANCES AND MAILBOXES

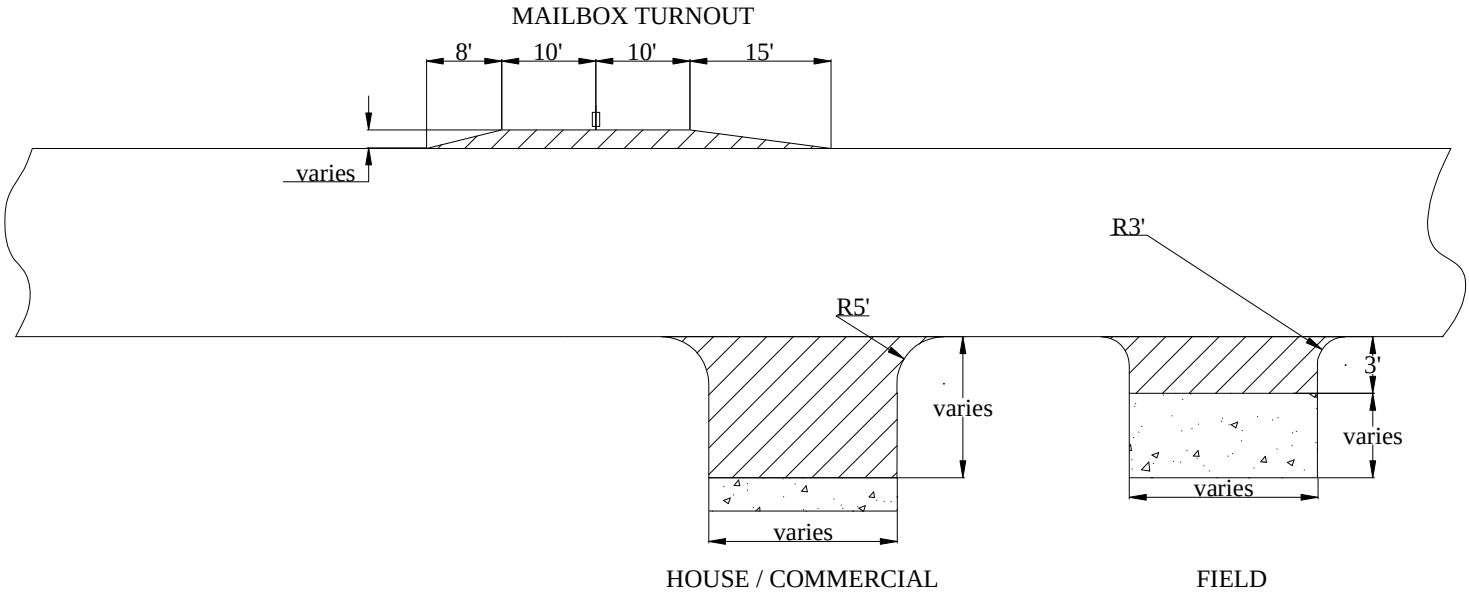


Notes: 1. Dimensions are approximate and may be adjusted in the field by the Engineer

# BUTT JOINT DETAIL

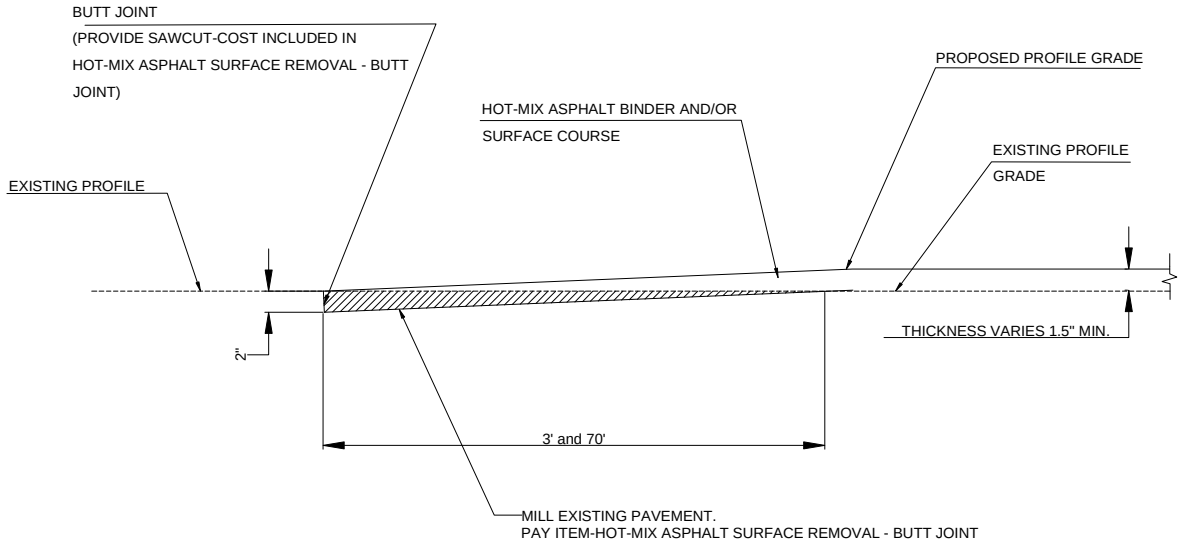

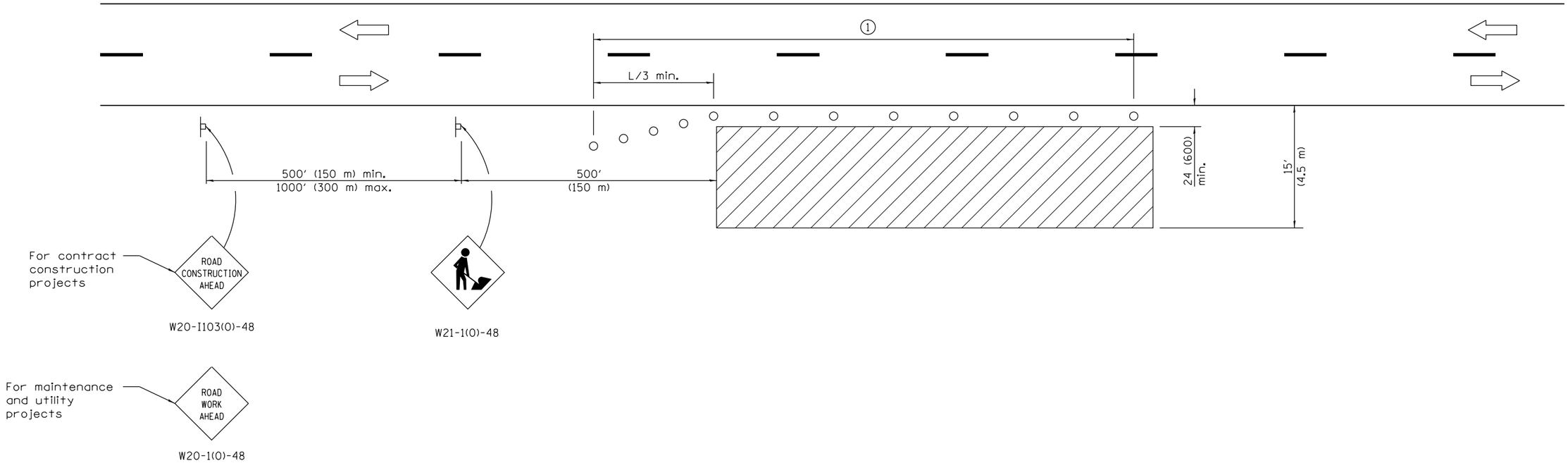


## TYPICAL APPLICATIONS

Utility operations
Culvert extensions
Side slope changes
Guardrail installation and maintenance
Delineator installation
Landscaping operations
Shoulder repair
Sign installation and maintenance

## SYMBOLS

Work area

Sign

Cone, drum or barricade

① When the work operation exceeds one hour, cones, drums or barricades shall be placed at 25′ (8 m) centers for L/3 distance, and at 50′ (15 m) centers through the remainder of the work area.

## GENERAL NOTES

This Standard is used where any vehicles, equipment, workers or their activities will encroach in the area 15′ (4.5 m) to 24 (600) from the edge of pavement.

Calculate L as follows:

| SPEED LIMIT | FORMULAS English | FORMULAS (Metric) |
|---|---|---|
| 40 mph (70 km/h) or less: | $L=\frac{WS^2}{60}$ | $L=\frac{WS^2}{150}$ |
| 45 mph (80 km/h) or greater: | L=(W)(S) | L=0.65(W)(S) |

W = Width of offset in feet (meters).

S = Normal posted speed mph (km/h).

All dimensions are in inches (millimeters) unless otherwise shown.

Illinois Department of Transportation

APPROVED January 1, 2014
ENGINEER OF SAFETY ENGINEERING

APPROVED January 1, 2014
ENGINEER OF DESIGN AND ENVIRONMENT

ISSUED 1-1-97

| DATE | REVISIONS |
|---|---|
| 1-1-14 | Revised workers sign |
| | number to agree with |
| | current MUTCD. |
| 1-1-13 | Omitted text 'WORKERS' |
| | sign. |
| | |

# OFF–RD OPERATIONS, 2L, 2W, 15′ (4.5 m) TO 24″ (600 mm) FROM PAVEMENT EDGE

STANDARD 701006–05

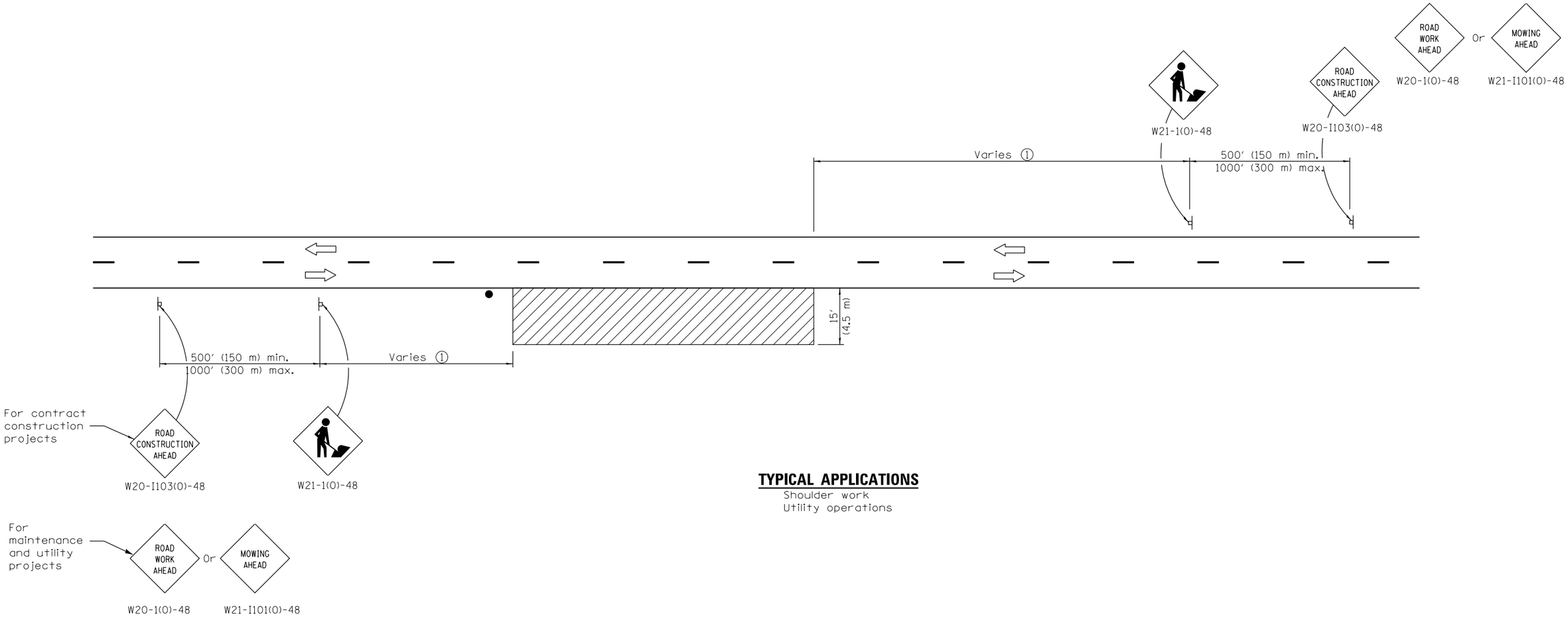


## TYPICAL APPLICATIONS

Shoulder work
Utility operations

① Minimum distance is 200′ (60 m). Maximum distance to be determined by the Engineer but should not exceed ½ the length required for one normal working day's operation, or 4 miles (6.4 km) whichever is less.

## GENERAL NOTES

This Standard is used where at any time, any vehicle, equipment. workers or their activities require an intermittent or continuous moving operation on the shoulder, where the average speed is 1 mph (2 km/h) or less.

When the work operation does not exceed 60 minutes, traffic control may be according to Standard 701301.

All dimensions are in inches (millimeters) unless otherwise shown.

## SYMBOLS

Work area

Sign

Flagger with traffic control sign when required

Illinois Department of Transportation

APPROVED January 1, 2014
ENGINEER OF SAFETY ENGINEERING

APPROVED January 1, 2014
ENGINEER OF DESIGN AND ENVIRONMENT

ISSUED 1-1-97

| DATE | REVISIONS |
|---|---|
| 1-1-14 | Revised workers sign |
| | number to agree with |
| | current MUTCD. |
| 1-1-13 | Omitted text 'WORKERS' |
| | sign. |
| | |

# OFF–RD MOVING OPERATIONS, 2L, 2W, DAY ONLY

STANDARD 701011–04

① Cones at 25′ (8 m) centers for 250′ (75 m). Additional cones may be placed at 50′ (15 m) centers. When drums or barricades are used, the interval between devices may be doubled.

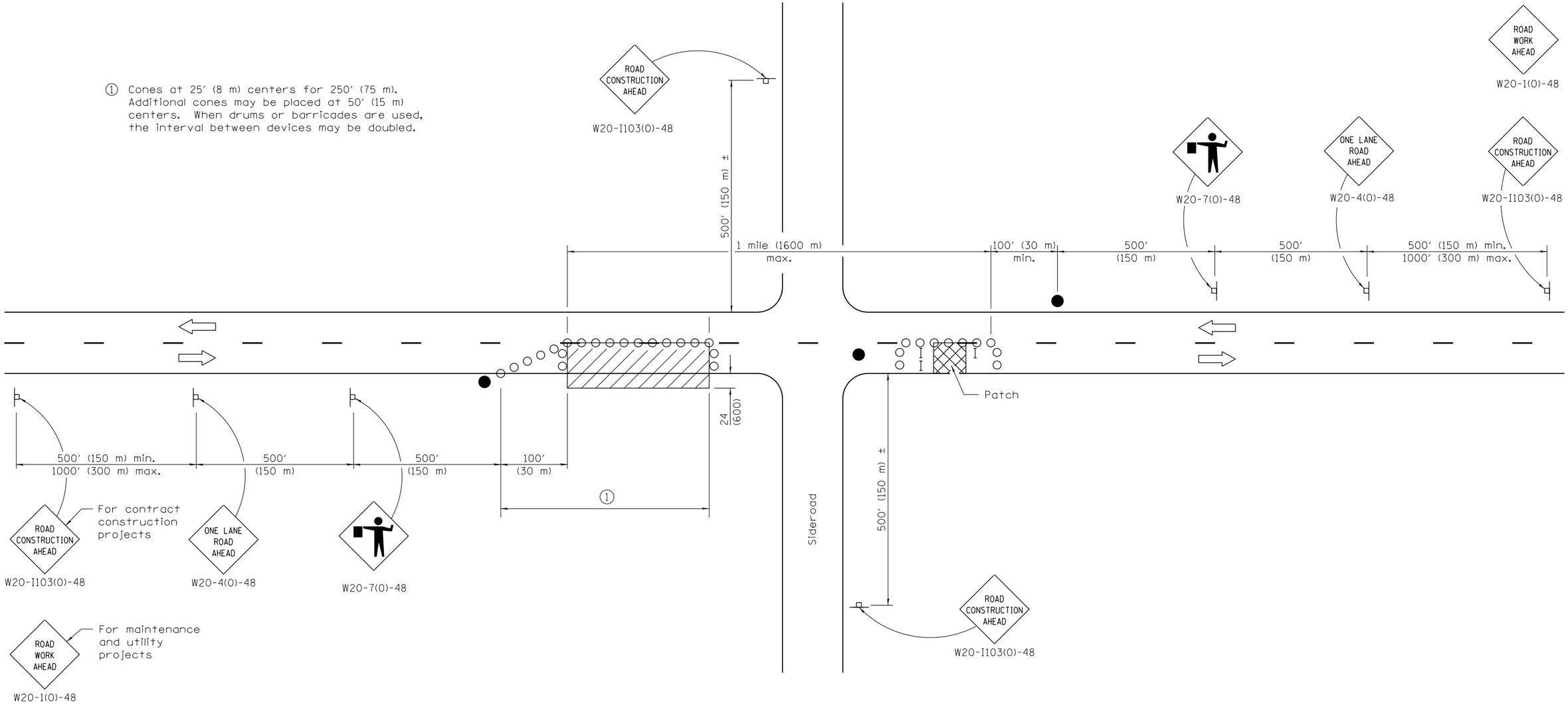


## SYMBOLS

- Work area
- Sign
- Barricade or drum
- Cone, drum or barricade
- Flagger with traffic control sign

## TYPICAL APPLICATIONS

Isolated patching
Utility operations
Storm sewer
Culverts
Cable placement

## GENERAL NOTES

This Standard is used where at any time, any vehicles, equipment, workers or their activities will encroach in the area between the center line and a line 24 (600) outside the edge of pavement for daylight operation.

When the distance between successive work areas exceeds 2000′ (600 m), additional warning signs, flaggers, and taper shall be placed as shown.

All dimensions are in inches (millimeters) unless otherwise shown.

Illinois Department of Transportation

APPROVED January 1, 2011
ENGINEER OF SAFETY ENGINEERING

APPROVED January 1, 2011
ENGINEER OF DESIGN AND ENVIRONMENT

ISSUED 1-1-97

| DATE | REVISIONS |
|---|---|
| 1-1-11 | Revised flagger sign. |
| | |
| | |
| 1-1-09 | Switched units to |
| | English (metric). |
| | Corrected sign No.'s. |

# LANE CLOSURE, 2L, 2W, DAY ONLY, FOR SPEEDS ≥ 45 MPH

**STANDARD 701201–04**

For any operation that encroaches in the area between the centerline and a line 24 (600) outside the edge of the pavement for a period of less than 15 minutes.

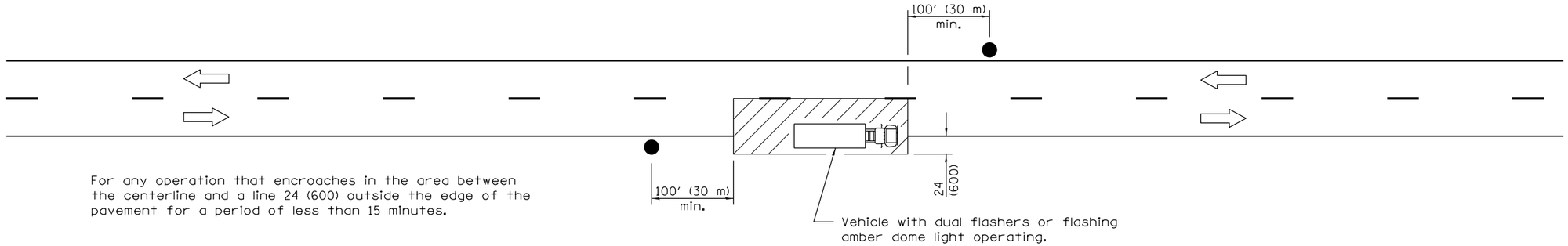


For any operation that is more than 24 (600) outside the edge of the pavement for a period of less than 60 minutes.

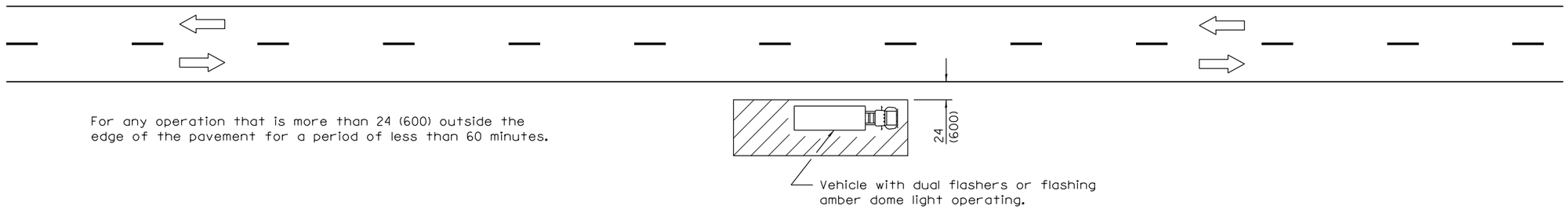


For any operation that encroaches in the area between the centerline and a line 24 (600) outside the edge of the pavement for a period in excess of 15 minutes but less than 60 minutes.

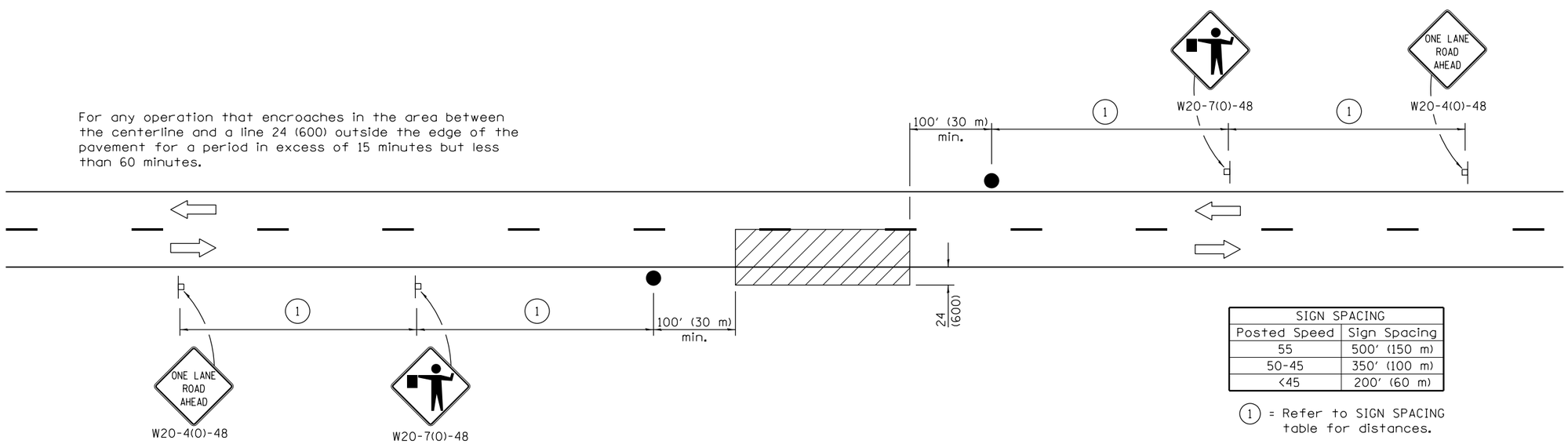


| SIGN SPACING | |
|---|---|
| Posted Speed | Sign Spacing |
| 55 | 500′ (150 m) |
| 50-45 | 350′ (100 m) |
| <45 | 200′ (60 m) |

(1) = Refer to SIGN SPACING table for distances.

All dimensions are in inches (millimeters) unless otherwise shown.

## TYPICAL APPLICATIONS

Marking patches
Field survey
String line
Utility operations
Cleaning up debris on pavement

## SYMBOLS

Work area

Sign on portable or permanent support

Flagger with traffic control sign

| DATE | REVISIONS |
|---|---|
| 1-1-11 | Revised flagger sign. |
| | |
| | |
| 1-1-09 | Switched units to |
| | English (metric). |
| | |

# LANE CLOSURE, 2L, 2W, SHORT TIME OPERATIONS

**STANDARD 701301–04**

Illinois Department of Transportation

APPROVED January 1, 2011
ENGINEER OF SAFETY ENGINEERING

APPROVED January 1, 2011
ENGINEER OF DESIGN AND ENVIRONMENT

ISSUED 1-1-97

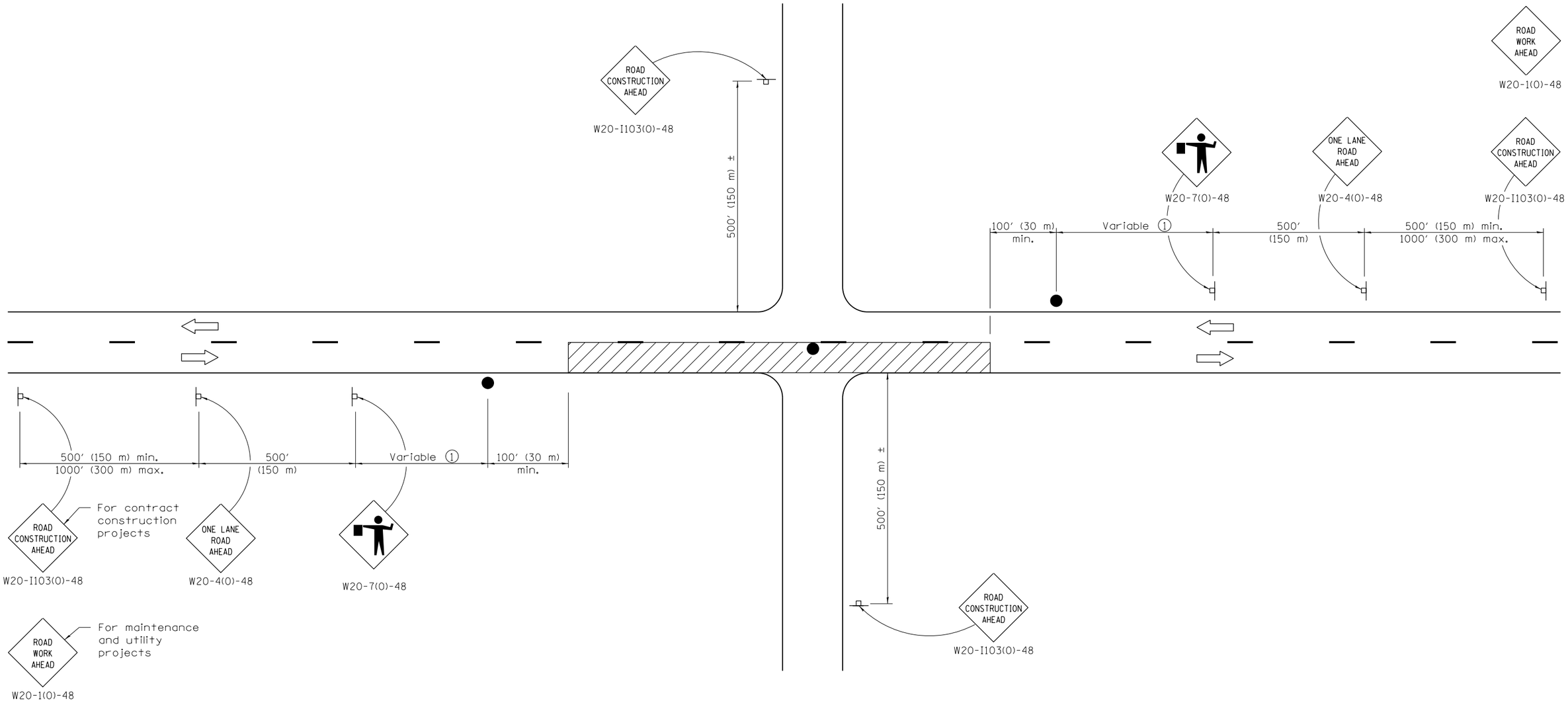


## TYPICAL APPLICATIONS

Bituminous resurfacing
Milling operations
Utility operations
Shoulder operations

① Minimum distance is 200′ (60 m). Maximum distance to be determined by the Engineer but should not exceed ½ the length required for one normal working day's operation or 2 miles (3200 m), whichever is less.

## SYMBOLS

Work area

Sign on portable or permanent support

Flagger with traffic control sign

## GENERAL NOTES

This Standard is used where at any time, any vehicle, equipment, workers or their activities require an intermittent or continuous moving operation on the pavement where the average speed of movement is greater than 1 mph (2 km/h) and less than 4 mph (6 km/h).

When the operation does not exceed 60 minutes, traffic control may be according to Standard 701301.

All dimensions are in inches (millimeters) unless otherwise shown.

Illinois Department of Transportation

APPROVED January 1, 2011
ENGINEER OF SAFETY ENGINEERING

APPROVED January 1, 2011
ENGINEER OF DESIGN AND ENVIRONMENT

ISSUED 1-1-97

| DATE | REVISIONS |
|---|---|
| 1-1-11 | Revised flagger sign. |
| | |
| | |
| 1-1-09 | Switched units to |
| | English (metric). |
| | Corrected sign No.'s. |

# LANE CLOSURE, 2L, 2W, SLOW MOVING OPERATIONS DAY ONLY, FOR SPEEDS ≥ 45 MPH

**STANDARD 701306–03**

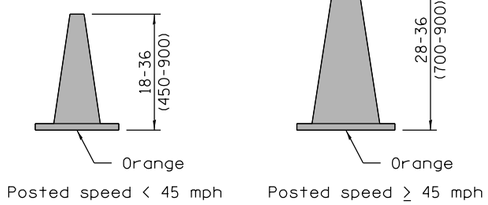


**CONE FOR DAYTIME**

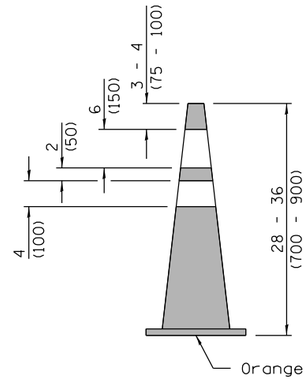


**REFLECTORIZED CONE FOR NIGHTTIME**

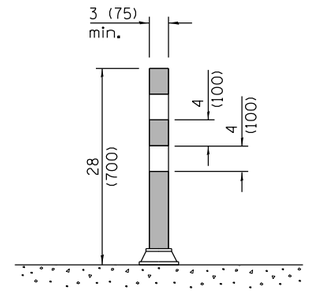


**FLEXIBLE DELINEATOR**

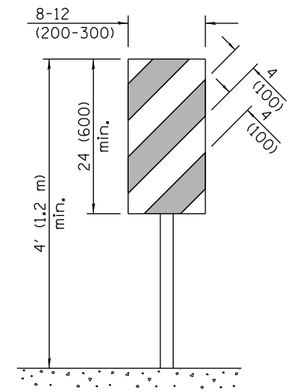


**VERTICAL PANEL**
POST MOUNTED

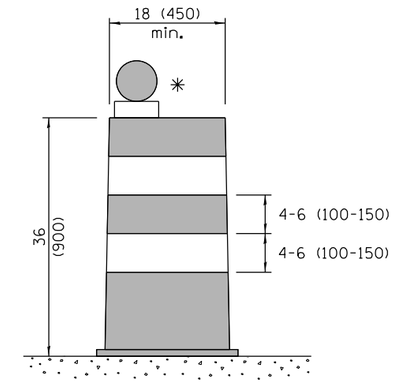


**DRUM**

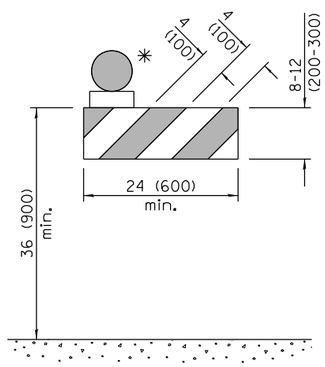


**TYPE I BARRICADE**

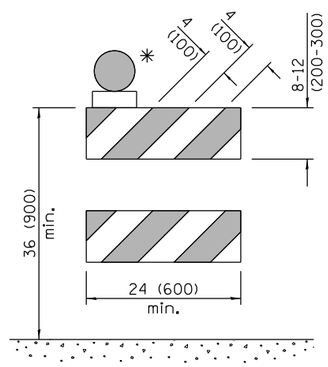


**TYPE II BARRICADE**

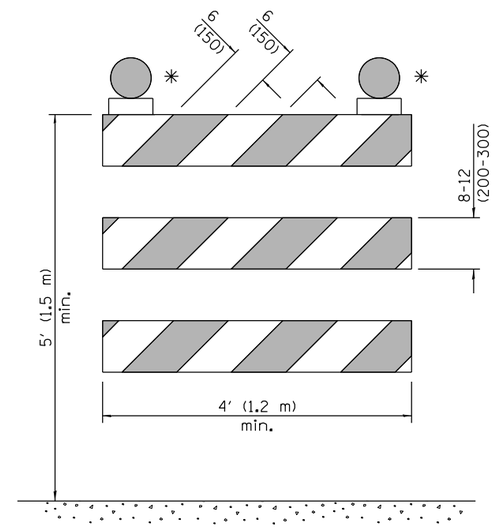


**TYPE III BARRICADE**

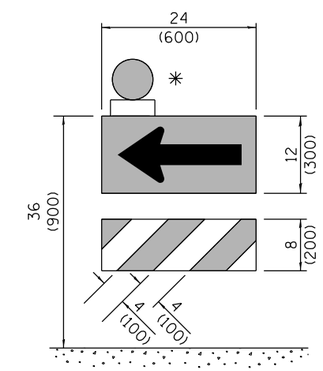


**DIRECTION INDICATOR BARRICADE**

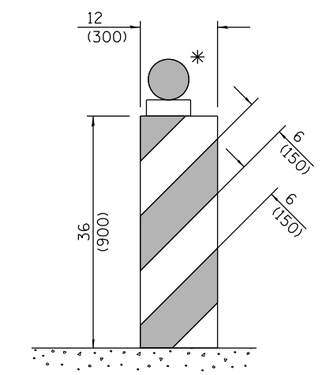


**VERTICAL BARRICADE**

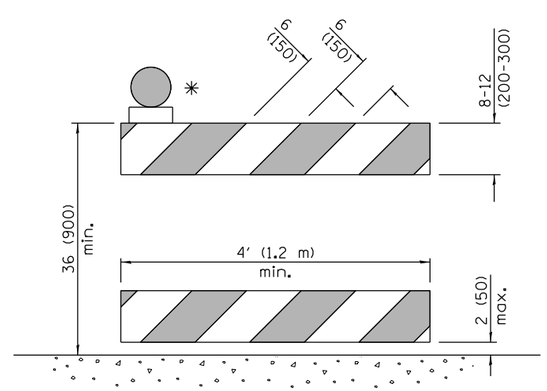


**DETECTABLE PEDESTRIAN CHANNELIZING BARRICADE**

✳ Warning lights (if required)

## GENERAL NOTES

All heights shown shall be measured above the pavement surface.

All dimensions are in inches (millimeters) unless otherwise shown.

Illinois Department of Transportation

APPROVED April 1, 2016
ENGINEER OF OPERATIONS
APPROVED April 1, 2016
ENGINEER OF DESIGN AND ENVIRONMENT

ISSUED 1-1-97

| DATE | REVISIONS |
|---|---|
| 4-1-16 | Add dim's to barricades. Rev. |
| | note for post mnt. signs. |
| | Rev. cone dtls. Add W12-I103. |
| 1-1-15 | Revised two sign numbers on |
| | sheet 2. Added note reg. |
| | PHOTO ENFORCED plaque. |

# TRAFFIC CONTROL DEVICES

(Sheet 1 of 3)

**STANDARD 701901-05**

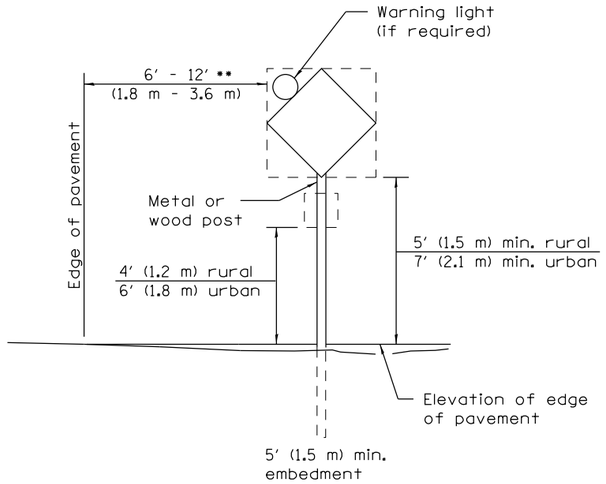


## POST MOUNTED SIGNS

•• When curb or paved shoulder are present this dimension shall be 24 (600) to the face of curb or 6′ (1.8 m) to the outside edge of the paved shoulder.

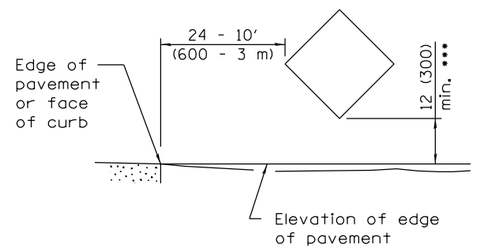


## SIGNS ON TEMPORARY SUPPORTS

••• When work operations exceed four days, this dimension shall be 5′ (1.5 m) min. If located behind other devices, the height shall be sufficient to be seen completely above the devices.

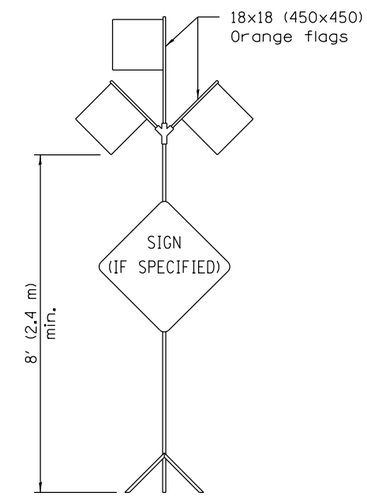


## HIGH LEVEL WARNING DEVICE

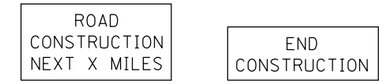


G20-I104(0)-6036 G20-I105(0)-6024

This signing is required for all projects 2 miles (3200 m) or more in length.

ROAD CONSTRUCTION NEXT X MILES sign shall be placed 500′ (150 m) in advance of project limits.

END CONSTRUCTION sign shall be erected at the end of the job unless another job is within 2 miles (3200 m).

Dual sign displays shall be utilized on multi-lane highways.

## WORK LIMIT SIGNING

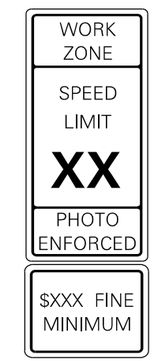


W21-I115(0)-3618

R2-1-3648

R10-I108p-3618 ••••

R2-I106p-3618

Sign assembly as shown on Standards or as allowed by District Operations.

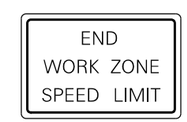


G20-I103(0)-6036

This sign shall be used when the above sign assembly is used.

## HIGHWAY CONSTRUCTION SPEED ZONE SIGNS

•••• R10-I108p shall only be used along roadways under the juristiction of the State.

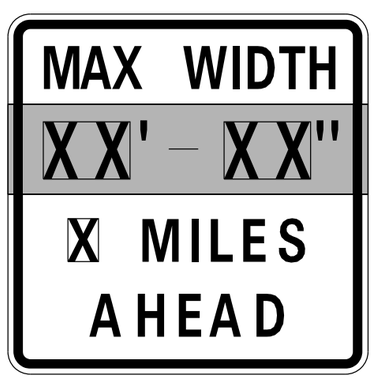


W12-I103-4848

## WIDTH RESTRICTION SIGN

XX′-XX″ width and X miles are variable.

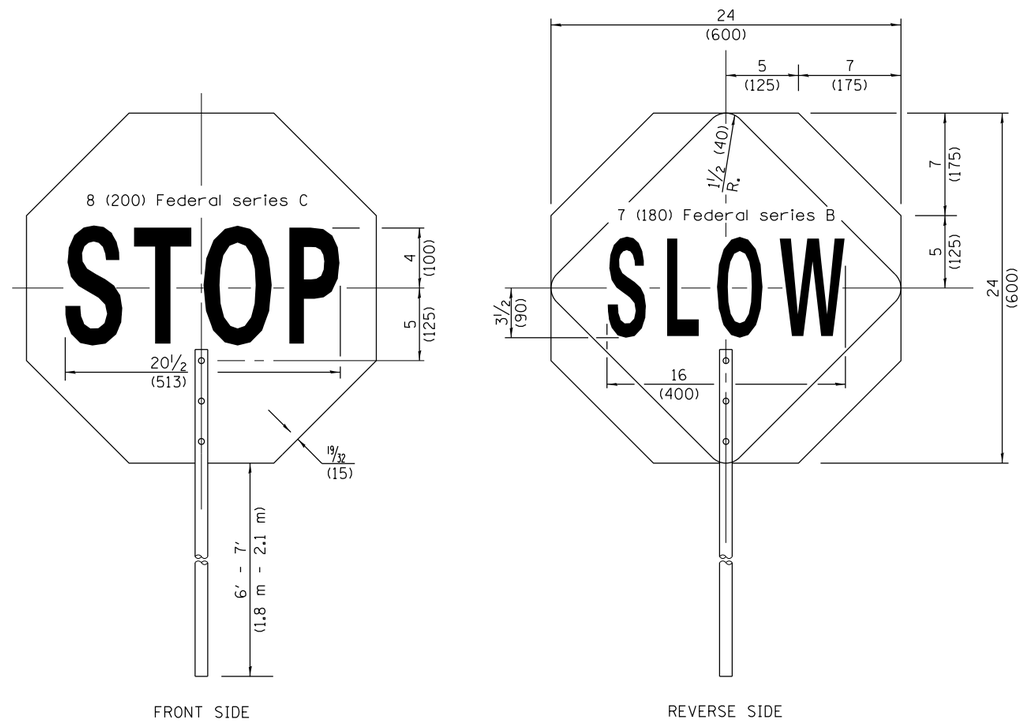


## FLAGGER TRAFFIC CONTROL SIGN

Illinois Department of Transportation

APPROVED April 1, 2016
ENGINEER OF OPERATIONS

APPROVED April 1, 2016
ENGINEER OF DESIGN AND ENVIRONMENT

ISSUED 1-1-97

# TRAFFIC CONTROL DEVICES

(Sheet 2 of 3)

**STANDARD 701901–05**

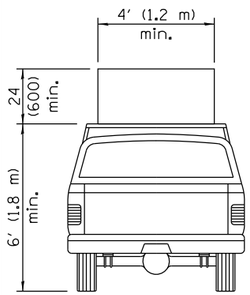


**TYPE A**
**ROOF**
**MOUNTED**

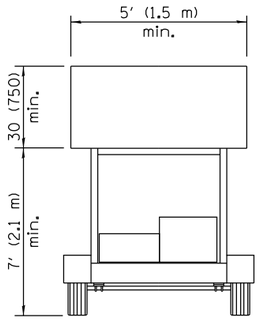


**TYPE B**
**ROOF OR TRAILER**
**MOUNTED**

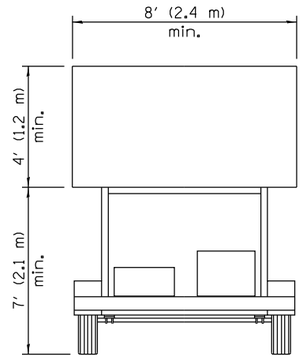


**TYPE C**
**TRAILER**
**MOUNTED**

**ARROW BOARDS**

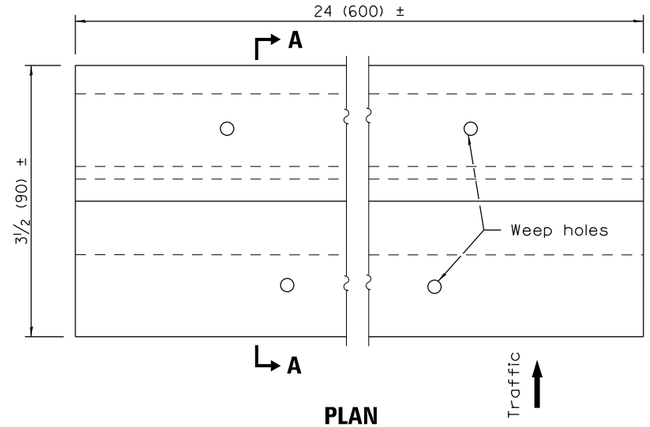


**PLAN**

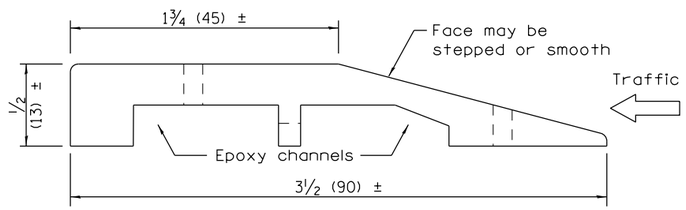


**SECTION A–A**

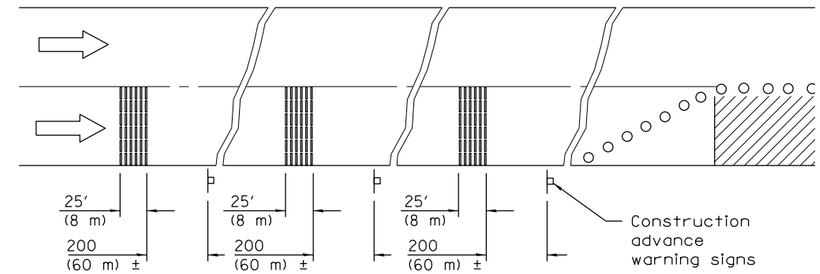


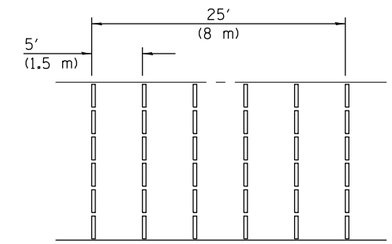


**TYPICAL INSTALLATION**

**TEMPORARY RUMBLE STRIPS**

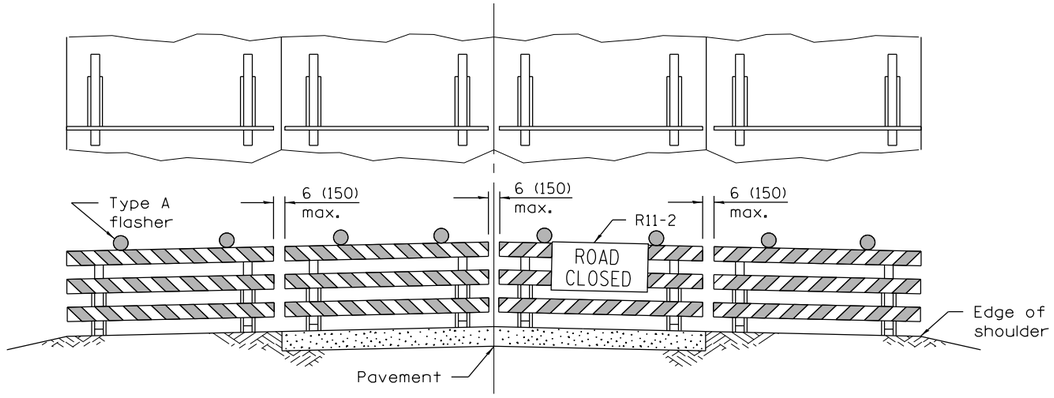


ROAD CLOSED TO ALL TRAFFIC

Reflectorized striping may be omitted on the back side of the barricades. If a Type III barricade with an attached sign panel which meets NCHRP 350 is not available, the sign may be mounted on an NCHRP 350 temporary sign support directly in front of the barricade.

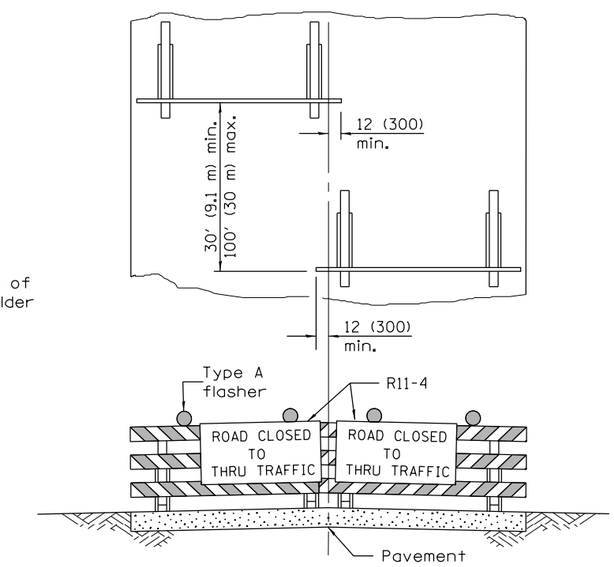


ROAD CLOSED TO THRU TRAFFIC

Reflectorized striping shall appear on both sides of the barricades. If a Type III barricade with an attached sign panel which meets NCHRP 350 is not available, the signs may be mounted on NCHRP 350 temporary sign supports directly in front of the barricade.

**TYPICAL APPLICATIONS OF**
**TYPE III BARRICADES CLOSING A ROAD**

Illinois Department of Transportation

APPROVED April 1, 2016
ENGINEER OF OPERATIONS
APPROVED April 1, 2016
ENGINEER OF DESIGN AND ENVIRONMENT

ISSUED 1-1-97

# TRAFFIC CONTROL DEVICES

(Sheet 3 of 3)

**STANDARD 701901–05**

# Tazewell County Prevailing Wage for July 2015

**(See explanation of column headings at bottom of wages)**

| Trade Name | RG | TYP | C | Base | FRMAN | M-F>8 | OSA | OSH | H/W | Pensn | Vac | Trng |
|---|---|---|---|---|---|---|---|---|---|---|---|---|
| ASBESTOS ABT-GEN | NW | BLD | | 26.700 | 28.200 | 1.5 | 1.5 | 2.0 | 7.700 | 16.21 | 0.000 | 0.800 |
| ASBESTOS ABT-GEN | NW | HWY | | 29.910 | 31.410 | 1.5 | 1.5 | 2.0 | 7.700 | 17.47 | 0.000 | 0.800 |
| ASBESTOS ABT-GEN | SE | BLD | | 27.150 | 27.900 | 1.5 | 1.5 | 2.0 | 8.500 | 13.25 | 0.000 | 0.800 |
| ASBESTOS ABT-MEC | | BLD | | 32.510 | 35.010 | 1.5 | 1.5 | 2.0 | 11.47 | 10.96 | 0.000 | 0.720 |
| BOILERMAKER | | BLD | | 38.000 | 41.000 | 2.0 | 2.0 | 2.0 | 7.070 | 15.99 | 0.000 | 0.400 |
| BRICK MASON | | BLD | | 32.380 | 33.880 | 1.5 | 1.5 | 2.0 | 8.600 | 9.870 | 0.000 | 0.590 |
| CARPENTER | | BLD | | 30.880 | 33.130 | 1.5 | 1.5 | 2.0 | 8.000 | 15.71 | 0.000 | 0.520 |
| CARPENTER | | HWY | | 32.700 | 34.950 | 1.5 | 1.5 | 2.0 | 8.000 | 15.81 | 0.000 | 0.520 |
| CEMENT MASON | | BLD | | 28.050 | 29.800 | 1.5 | 1.5 | 2.0 | 7.500 | 15.65 | 0.000 | 0.500 |
| CEMENT MASON | | HWY | | 29.280 | 30.780 | 1.5 | 1.5 | 2.0 | 7.500 | 16.02 | 0.000 | 0.500 |
| CERAMIC TILE FNSHER | | BLD | | 29.890 | 0.000 | 1.5 | 1.5 | 2.0 | 8.600 | 10.05 | 0.000 | 0.580 |
| ELECTRIC PWR EQMT OP | | ALL | | 38.300 | 45.290 | 1.5 | 1.5 | 2.0 | 6.150 | 10.73 | 0.000 | 0.380 |
| ELECTRIC PWR GRNDMAN | | ALL | | 26.280 | 45.290 | 1.5 | 1.5 | 2.0 | 5.790 | 7.360 | 0.000 | 0.260 |
| ELECTRIC PWR LINEMAN | | ALL | | 42.540 | 45.290 | 1.5 | 1.5 | 2.0 | 6.280 | 11.92 | 0.000 | 0.430 |
| ELECTRIC PWR TRK DRV | | ALL | | 27.560 | 45.290 | 1.5 | 1.5 | 2.0 | 5.830 | 7.720 | 0.000 | 0.280 |
| ELECTRICIAN | | ALL | | 34.820 | 37.320 | 1.5 | 1.5 | 2.0 | 6.500 | 11.68 | 0.000 | 0.800 |
| ELECTRICIAN | | BLD | | 34.820 | 37.320 | 1.5 | 1.5 | 2.0 | 6.100 | 11.43 | 0.000 | 0.400 |
| ELECTRONIC SYS TECH | | BLD | | 28.250 | 30.250 | 1.5 | 1.5 | 2.0 | 6.350 | 10.54 | 0.000 | 0.400 |
| ELEVATOR CONSTRUCTOR | | BLD | | 41.690 | 46.900 | 2.0 | 2.0 | 2.0 | 13.57 | 14.21 | 3.340 | 0.600 |
| GLAZIER | | BLD | | 31.870 | 33.870 | 1.5 | 1.5 | 1.5 | 10.25 | 7.700 | 0.000 | 1.250 |
| HT/FROST INSULATOR | | BLD | | 43.350 | 45.850 | 1.5 | 1.5 | 2.0 | 11.47 | 12.36 | 0.000 | 0.720 |
| IRON WORKER | | BLD | | 32.190 | 34.090 | 0.0 | 0.0 | 0.0 | 9.490 | 13.91 | 0.000 | 0.000 |
| IRON WORKER | | HWY | | 35.980 | 37.980 | 0.0 | 0.0 | 0.0 | 9.490 | 13.91 | 0.000 | 0.000 |
| LABORER | NW | BLD | | 26.100 | 27.600 | 1.5 | 1.5 | 2.0 | 7.700 | 16.21 | 0.000 | 0.800 |
| LABORER | NW | HWY | | 29.160 | 30.660 | 1.5 | 1.5 | 2.0 | 7.700 | 17.47 | 0.000 | 0.800 |
| LABORER | SE | BLD | | 27.150 | 27.900 | 1.5 | 1.5 | 2.0 | 8.500 | 13.25 | 0.000 | 0.800 |
| LABORER | SE | HWY | | 30.490 | 31.990 | 1.5 | 1.5 | 2.0 | 8.500 | 15.30 | 0.000 | 0.800 |
| LATHER | | BLD | | 30.880 | 33.130 | 1.5 | 1.5 | 2.0 | 8.000 | 15.71 | 0.000 | 0.520 |
| MACHINERY MOVER | | HWY | | 35.980 | 37.980 | 0.0 | 0.0 | 0.0 | 9.490 | 13.91 | 0.000 | 0.000 |
| MACHINIST | | BLD | | 45.350 | 47.850 | 1.5 | 1.5 | 2.0 | 7.260 | 8.950 | 1.850 | 0.000 |
| MARBLE FINISHERS | | BLD | | 29.890 | 0.000 | 1.5 | 1.5 | 2.0 | 8.600 | 10.05 | 0.000 | 0.580 |
| MARBLE MASON | | BLD | | 31.650 | 32.900 | 1.5 | 1.5 | 2.0 | 8.600 | 10.05 | 0.000 | 0.580 |
| MILLWRIGHT | | BLD | | 31.060 | 33.310 | 1.5 | 1.5 | 2.0 | 8.000 | 15.87 | 0.000 | 0.520 |
| MILLWRIGHT | | HWY | | 33.060 | 35.310 | 1.5 | 1.5 | 2.0 | 8.000 | 15.95 | 0.000 | 0.520 |
| OPERATING ENGINEER | | BLD | 1 | 37.050 | 40.050 | 1.5 | 1.5 | 2.0 | 7.000 | 17.48 | 0.000 | 3.000 |
| OPERATING ENGINEER | | BLD | 2 | 34.450 | 40.050 | 1.5 | 1.5 | 2.0 | 7.000 | 17.48 | 0.000 | 3.000 |
| OPERATING ENGINEER | | BLD | 3 | 30.160 | 40.050 | 1.5 | 1.5 | 2.0 | 7.000 | 17.48 | 0.000 | 3.000 |
| OPERATING ENGINEER | | HWY | 1 | 38.150 | 41.150 | 1.5 | 1.5 | 2.0 | 7.250 | 18.23 | 0.000 | 3.000 |
| OPERATING ENGINEER | | HWY | 2 | 35.460 | 41.150 | 1.5 | 1.5 | 2.0 | 7.250 | 18.23 | 0.000 | 3.000 |
| OPERATING ENGINEER | | HWY | 3 | 31.030 | 41.150 | 1.5 | 1.5 | 2.0 | 7.250 | 18.23 | 0.000 | 3.000 |
| PAINTER | | ALL | | 33.650 | 35.650 | 1.5 | 1.5 | 1.5 | 10.30 | 8.200 | 0.000 | 1.350 |
| PAINTER SIGNS | | BLD | | 33.920 | 38.090 | 1.5 | 1.5 | 1.5 | 2.600 | 2.710 | 0.000 | 0.000 |
| PILEDRIVER | | BLD | | 31.880 | 34.130 | 1.5 | 1.5 | 2.0 | 8.000 | 15.71 | 0.000 | 0.520 |
| PILEDRIVER | | HWY | | 33.700 | 35.950 | 1.5 | 1.5 | 2.0 | 8.000 | 15.81 | 0.000 | 0.520 |
| PIPEFITTER | | BLD | | 37.400 | 41.510 | 1.5 | 1.5 | 2.0 | 7.000 | 11.63 | 0.000 | 1.060 |
| PLASTERER | | BLD | | 28.140 | 29.770 | 1.5 | 1.5 | 2.0 | 7.500 | 15.00 | 0.000 | 0.870 |
| PLUMBER | | BLD | | 34.520 | 37.630 | 1.5 | 1.5 | 2.0 | 7.000 | 13.86 | 0.000 | 0.950 |
| ROOFER | | BLD | | 30.580 | 32.110 | 1.5 | 1.5 | 2.0 | 8.450 | 7.220 | 0.000 | 0.250 |
| SHEETMETAL WORKER | | BLD | | 32.430 | 34.050 | 1.5 | 1.5 | 2.0 | 9.120 | 15.55 | 0.000 | 0.780 |
| SIGN HANGER | | HWY | | 35.980 | 37.980 | 0.0 | 0.0 | 0.0 | 9.490 | 13.91 | 0.000 | 0.000 |
| SPRINKLER FITTER | | BLD | | 37.120 | 39.870 | 1.5 | 1.5 | 2.0 | 8.420 | 8.500 | 0.000 | 0.350 |
| STEEL ERECTOR | | HWY | | 35.980 | 37.980 | 0.0 | 0.0 | 0.0 | 9.490 | 13.91 | 0.000 | 0.000 |
| STONE MASON | | BLD | | 32.380 | 33.880 | 1.5 | 1.5 | 2.0 | 8.600 | 9.870 | 0.000 | 0.590 |
| ~~SURVEY WORKER~~ | | ->NOT IN EFFECT | | | NW ALL | | 28.600 | 30.100 | 1.5 | 1.5 | 2.0 | 7.700 | 14.86 | 0.000 | 0.800 |
| ~~SURVEY WORKER~~ | | ->NOT IN EFFECT | | | SE ALL | | 29.060 | 30.560 | 1.5 | 1.5 | 2.0 | 8.000 | 14.06 | 0.000 | 0.800 |

| | | | | | | | | | | | |
|---|---|---|---|---|---|---|---|---|---|---|---|
| TERRAZZO FINISHER | BLD | | 29.890 | 0.000 | 1.5 | 1.5 | 2.0 | 8.600 | 10.05 | 0.000 | 0.580 |
| TERRAZZO MASON | BLD | | 31.650 | 32.900 | 1.5 | 1.5 | 2.0 | 8.600 | 10.05 | 0.000 | 0.580 |
| TILE MASON | BLD | | 31.650 | 32.900 | 1.5 | 1.5 | 2.0 | 8.600 | 10.05 | 0.000 | 0.580 |
| TRUCK DRIVER | ALL | 1 | 33.000 | 36.550 | 1.5 | 1.5 | 2.0 | 11.10 | 5.230 | 0.000 | 0.250 |
| TRUCK DRIVER | ALL | 2 | 33.480 | 36.550 | 1.5 | 1.5 | 2.0 | 11.10 | 5.230 | 0.000 | 0.250 |
| TRUCK DRIVER | ALL | 3 | 33.700 | 36.550 | 1.5 | 1.5 | 2.0 | 11.10 | 5.230 | 0.000 | 0.250 |
| TRUCK DRIVER | ALL | 4 | 34.010 | 36.550 | 1.5 | 1.5 | 2.0 | 11.10 | 5.230 | 0.000 | 0.250 |
| TRUCK DRIVER | ALL | 5 | 34.900 | 36.550 | 1.5 | 1.5 | 2.0 | 11.10 | 5.230 | 0.000 | 0.250 |
| TRUCK DRIVER | O&C | 1 | 27.280 | 30.220 | 1.5 | 1.5 | 2.0 | 11.40 | 5.440 | 0.000 | 0.250 |
| TRUCK DRIVER | O&C | 2 | 27.680 | 30.220 | 1.5 | 1.5 | 2.0 | 11.40 | 5.440 | 0.000 | 0.250 |
| TRUCK DRIVER | O&C | 3 | 27.860 | 30.220 | 1.5 | 1.5 | 2.0 | 11.40 | 5.440 | 0.000 | 0.250 |
| TRUCK DRIVER | O&C | 4 | 28.110 | 30.220 | 1.5 | 1.5 | 2.0 | 11.40 | 5.440 | 0.000 | 0.250 |
| TRUCK DRIVER | O&C | 5 | 28.850 | 30.220 | 1.5 | 1.5 | 2.0 | 11.40 | 5.440 | 0.000 | 0.250 |
| TUCKPOINTER | BLD | | 32.380 | 33.880 | 1.5 | 1.5 | 2.0 | 8.600 | 9.870 | 0.000 | 0.590 |

Legend: RG (Region)
TYP (Trade Type - All,Highway,Building,Floating,Oil & Chip,Rivers)
C (Class)
Base (Base Wage Rate)
FRMAN (Foreman Rate)
M-F>8 (OT required for any hour greater than 8 worked each day, Mon through Fri.
OSA (Overtime (OT) is required for every hour worked on Saturday)
OSH (Overtime is required for every hour worked on Sunday and Holidays)
H/W (Health & Welfare Insurance)
Pensn (Pension)
Vac (Vacation)
Trng (Training)

## Explanations

TAZEWELL COUNTY

ASBESTOS - See Laborers

CARPENTERS (NORTH) - That part of the county North including the towns of Marquette Hts., Morton, Creve Coeur and Deer Creek.

LABORERS (NORTHWEST) - The area bounded by the old city limits of East Peoria.

MILLWRIGHTS - See Carpenters
PILEDRIVERS - See Carpenters

The following list is considered as those days for which holiday rates of wages for work performed apply: New Years Day, Memorial Day, Fourth of July, Labor Day, Thanksgiving Day, Christmas Day and Veterans Day in some classifications/counties. Generally, any of these holidays which fall on a Sunday is celebrated on the following Monday. This then makes work performed on that Monday payable at the appropriate overtime rate for holiday pay. Common practice in a given local may alter certain days of celebration. If in doubt, please check with IDOL.

Oil and chip resealing (O&C) means the application of road oils and liquid asphalt to coat an existing road surface, followed by application of aggregate chips or gravel to coated surface, and subsequent rolling of material to seal the surface.

EXPLANATION OF CLASSES

ASBESTOS - GENERAL - removal of asbestos material/mold and hazardous materials from any place in a building, including mechanical systems where those mechanical systems are to be removed. This includes the removal of asbestos materials/mold and hazardous materials from ductwork or pipes in a building when the building is to be demolished

at the time or at some close future date.

ASBESTOS - MECHANICAL - Removal of asbestos material from mechanical systems, such as pipes, ducts, and boilers, where the mechanical systems are to remain.

CERAMIC TILE FINISHER, MARBLE FINISHER, TERRAZZO FINISHER

Assisting, helping or supporting the tile, marble and terrazzo mechanic by performing their historic and traditional work assignments required to complete the proper installation of the work covered by said crafts. The term "Ceramic" is used for naming the classification only and is in no way a limitation of the product handled. Ceramic takes into consideration most hard tiles.

ELECTRONIC SYSTEMS TECHNICIAN

Installation, service and maintenance of low-voltage systems which utilizes the transmission and/or transference of voice, sound, vision, or digital for commercial, education, security and entertainment purposes for the following: TV monitoring and surveillance, background/foreground music, intercom and telephone interconnect, field programming, inventory control systems, microwave transmission, multi-media, multiplex, radio page, school, intercom and sound burglar alarms and low voltage master clock systems.

Excluded from this classification are energy management systems, life safety systems, supervisory controls and data acquisition systems not intrinsic with the above listed systems, fire alarm systems, nurse call systems and raceways exceeding fifteen feet in length.

SURVEY WORKER - Operated survey equipment including data collectors, G.P.S. and robotic instruments, as well as conventional levels and transits.

TRUCK DRIVER - BUILDING, HEAVY AND HIGHWAY CONSTRUCTION
Class 1. Drivers on 2 axle trucks hauling less than 9 ton. Air compressor and welding machines and brooms, including those pulled by separate units, truck driver helpers, warehouse employees, mechanic helpers, greasers and tiremen, pickup trucks when hauling materials, tools, or workers to and from and on-the-job site, and fork lifts up to 6,000 lb. capacity.

Class 2. Two or three axle trucks hauling more than 9 ton but hauling less than 16 ton. A-frame winch trucks, hydrolift trucks, vactor trucks or similar equipment when used for transportation purposes. Fork lifts over 6,000 lb. capacity, winch trucks, four axle combination units, and ticket writers.

Class 3. Two, three or four axle trucks hauling 16 ton or more. Drivers on water pulls, articulated dump trucks, mechanics and working forepersons, and dispatchers. Five axle or more combination units.

Class 4. Low Boy and Oil Distributors.

Class 5. Drivers who require special protective clothing while employed on hazardous waste work.

TRUCK DRIVER - OIL AND CHIP RESEALING ONLY.

This shall encompass laborers, workers and mechanics who drive contractor or subcontractor owned, leased, or hired pickup, dump, service, or oil distributor trucks. The work includes transporting materials and equipment (including but not limited to, oils, aggregate

supplies, parts, machinery and tools) to or from the job site; distributing oil or liquid asphalt and aggregate; stock piling material when in connection with the actual oil and chip contract. The Truck Driver (Oil & Chip Resealing) wage classification does not include supplier delivered materials.

OPERATING ENGINEERS - BUILDING

Class 1. Cranes; Overhead Cranes; Gradall; All Cherry Pickers; Mechanics; Central Concrete Mixing Plant Operator; Road Pavers (27E - Dual Drum - Tri Batchers); Blacktop Plant Operators and Plant Engineers; 3 Drum Hoist; Derricks; Hydro Cranes; Shovels; Skimmer Scoops; Koehring Scooper; Drag Lines; Backhoe; Derrick Boats; Pile Drivers and Skid Rigs; Clamshells; Locomotive Cranes; Dredge (all types) Motor Patrol; Power Blades - Dumore - Elevating and similar types; Tower Cranes (Crawler-Mobile) and Stationary; Crane-type Backfiller; Drott Yumbo and similar types considered as Cranes; Caisson Rigs; Dozer; Tournadozer; Work Boats; Ross Carrier; Helicopter; Tournapulls - all and similar types; Scoops (all sizes); Pushcats; Endloaders (all types); Asphalt Surfacing Machine; Slip Form Paver; Rock Crusher; Heavy Equipment Greaser; CMI, CMI Belt Placer, Auto Grade & 3 Track and similar types; Side Booms; Multiple Unit Earth Movers; Creter Crane; Trench Machine; Pump-crete-Belt Crete-Squeeze Cretes-Screw-type Pumps and Gypsum; Bulker & Pump - Operator will clean; Formless Finishing Machine; Flaherty Spreader or similar types; Screed Man on Laydown Machine; Wheel Tractors (industrial or Farm-type w/Dozer-Hoe-Endloader or other attachments); F.W.D. & Similar Types; Vermeer Concrete Saw.

Class 2. Dinkeys; Power Launches; PH One-pass Soil Cement Machine (and similar types); Pugmill with Pump; Backfillers; Euclid Loader; Forklifts; Jeeps w/Ditching Machine or other attachments; Tuneluger; Automatic Cement and Gravel Batching Plants; Mobile Drills (Soil Testing) and similar types; Gurries and Similar Types; (1) and (2) Drum Hoists (Buck Hoist and Similar Types); Chicago Boom; Boring Machine & Pipe Jacking Machine; Hydro Boom; Dewatering System; Straw Blower; Hydro Seeder; Assistant Heavy Equipment Greaser on Spread; Tractors (Track type) without Power Unit pulling Rollers; Rollers on Asphalt -- Brick Macadem; Concrete Breakers; Concrete Spreaders; Mule Pulling Rollers; Center Stripper; Cement Finishing Machines & CMI Texture & Reel Curing Machines; Cement Finishing Machine; Barber Green or similar loaders; Vibro Tamper (All similar types) Self-propelled; Winch or Boom Truck; Mechanical Bull Floats; Mixers over 3 Bag to 27E; Tractor pulling Power Blade or Elevating Grader; Porter Rex Rail; Clary Screed; Truck Type Hoptoe Oilers; Fireman; Spray Machine on Paving; Curb Machines; Truck Crane Oilers; Oil Distributor; Truck-Mounted Saws.

Class 3. Air Compressor; Power Subgrader; Straight Tractor; Trac Air without attachments; Herman Nelson Heater, Dravo, Warner, Silent Glo, and similar types; Roller: Five (5) Ton and under on Earth or Gravel; Form Grader; Crawler Crane & Skid Rig Oilers; Freight Elevators - permanently installed; Pump; Light Plant; Generator; Conveyor (1) or (2) - Operator will clean; Welding Machine; Mixer (3) Bag and Under (Standard Capacity with skip); Bulk Cement Plant; Oiler on Central Concrete Mixing Plant.

OPERATING ENGINEERS - HEAVY AND HIGHWAY CONSTRUCTION

CLASS 1. Cranes; Hydro Cranes; Shovels; Crane Type Backfiller; Tower, Mobile, Crawler, & Stationary Cranes; Derricks; Hoists (3 Drum); Draglines; Drott Yumbo & Similar Types considered as Cranes; 360 Degree Swing Excavator (Shears, Grapples, Movacs, etc.); Back Hoe; Derrick Boats; Pile Driver and Skid Rigs; Clam Shell; Locomotive -

Cranes; Road Pavers - Single Drum - Dual Drum - Tri Batcher; Motor Patrols & Power Blades - Dumore - Elevating & Similar Types; Mechanics; Central Concrete Mixing Plant Operator; Asphalt Batch Plant Operators and Plant Engineers; Gradall; Caisson Rigs; Skimmer Scoop - Koering Scooper; Dredges (all types); Hoptoe; All Cherry Pickers; Work Boat; Ross Carrier; Helicopter; Dozer; Tournadozer; Tournapulls - all and similar types; Operation of Concrete and all Recycle Machines; Multiple Unit Earth Movers; Scoops (all sizes); Pushcats; Endloaders (all types); Asphalt Surfacing Machine; Slip Form Paver; Rock Crusher; Operation of Material Crusher, Screening Plants, and Tunnel Boring Machine; Heavy Equipment Greaser (top greaser on spread); CMI, Auto Grade, CMI Belt Placer & 3 Track and Similar Types; Side Booms; Asphalt Heater & Planer Combination (used to plane streets); Wheel Tractors (with Dozer, Hoe or Endloader Attachments); CAT Earthwork Compactors and Similar Types; Blaw Knox Spreader and Similar Types; Trench Machines; Pump Crete - Belt Crete - Squeeze Crete - Screw Type Pumps and Gypsum (operator will clean); Creter Crane; Operation of Concrete Pump Truck; Formless Finishing Machines; Flaherty Spreader or Similar Types; Screed Man on Laydown Machine; Vermeer Concrete Saw; Operation of Laser Screed; Span Saw; Dredge Leverman; Dredge Engineer; Lull or Similar Type; Hydro-Boom Truck; Operation of Guard Rail Machine; and Starting Engineer on Pipeline or Construction (11 or more pieces) including: Air Compressor (Trailer Mounted), All Forced Air Heaters (regardless of Size), Water Pumps (Greater than 4-1/2" or Total Discharge Over 4-1/2"), Light Plants, Generators (Trailer Mounted - Excluding Decontamination Trailer), Welding Machines (Any Size or Mode of Power), Conveyor, Mixer (any size), Stud Welder, Power Pac, etc, and Ground Heater (Trailer Mounted).

CLASS 2. Bulker & Pump; Power Launches; Boring Machine & Pipe Jacking Machine; Dinkeys; Operation of Carts, Powered Haul Unit for a Boring Machine; P & H One Pass Soil Cement Machines and Similar Types; Wheel Tractors (Industry or Farm Type - Other); Back Fillers; Euclid Loader; Fork Lifts; Jeep w/Ditching Machine or Other Attachments; Tunneluger; Automatic Cement & Gravel Batching Plants; Mobile Drills - Soil Testing and Similar Types; Pugmill with Pump; All (1) and (2) Drum Hoists; Dewatering System; Straw Blower; Hydro-Seeder; Bump Grinders (self-propelled); Assistant Heavy Equipment Greaser; Apsco Spreader; Tractors (Track-Type) without Power Units Pulling Rollers; Rollers on Asphalt - Brick or Macadam; Concrete Breakers; Concrete Spreaders; Cement Strippers; Cement Finishing Machines & CMI Texture & Reel Curing Machines; Vibro-Tampers (All Similar Types Self-Propelled); Mechanical Bull Floats; Self-Propelled Concrete Saws; Truck Mounted Power Saws; Operation of Curb Cutters; Mixers - Over Three (3) Bags; Winch and Boom Trucks; Tractor Pulling Power Blade or Elevating Grader; Porter Rex Rail; Clary Screed; Mule Pulling Rollers; Pugmill without Pump; Barber Greene or Similar Loaders; Track Type Tractor w/Power Unit attached (minimum); Fireman; Spray Machine on Paving; Curb Machines; Paved Ditch Machine; Power Broom; Self-Propelled Sweepers; Self-Propelled Conveyors; Power Subgrader; Oil Distributor; Straight Tractor; Truck Crane Oiler; Truck Type Oilers; Directional Boring Machine; Horizontal Directional Drill; Articulating End Dump Vehicles; Starting Engineer on Pipeline or Construction (6 -10 pieces) including: Air Compressor (Trailer Mounted), All Forced Air Heaters (regardless of Size), Water Pumps (Greater than 4-1/2" or Total Discharge Over 4-1/2"), Light Plants, Generators (Trailer Mounted - Excluding Decontamination Trailer), Welding Machines (Any Size or Mode of Power), Conveyor, Mixer (any size), Stud Welder, Power Pac, etc., and Ground Heater (Trailer Mounted).

CLASS 3. Straight Framed Truck Mounted Vac Unit (separately powered); Trac Air Machine (without attachments); Rollers - Five Ton and Under on Earth and Gravel; Form Graders; Bulk Cement Plant; Oilers; and

Starting Engineer on Pipeline or Construction (3 - 5 pieces) including: Air Compressor (Trailer Mounted), All Forced Air Heaters (regardless of Size), Water Pumps (Greater than 4-1/2" or Total Discharge Over 4-1/2"), Light Plants, Generators (Trailer Mounted - Excluding Decontamination Trailer), Welding Machines (Any Size or Mode of Power), Conveyor, Mixer (any size), Stud Welder, Power Pac, etc., and Ground Heater (Trailer Mounted).

Other Classifications of Work:

For definitions of classifications not otherwise set out, the Department generally has on file such definitions which are available. If a task to be performed is not subject to one of the classifications of pay set out, the Department will upon being contacted state which neighboring county has such a classification and provide such rate, such rate being deemed to exist by reference in this document. If no neighboring county rate applies to the task, the Department shall undertake a special determination, such special determination being then deemed to have existed under this determination. If a project requires these, or any classification not listed, please contact IDOL at 217-782-1710 for wage rates or clarifications.

LANDSCAPING

Landscaping work falls under the existing classifications for laborer, operating engineer and truck driver. The work performed by landscape plantsman and landscape laborer is covered by the existing classification of laborer. The work performed by landscape operators (regardless of equipment used or its size) is covered by the classifications of operating engineer. The work performed by landscape truck drivers (regardless of size of truck driven) is covered by the classifications of truck driver.