# Tazewell County Highway Department

## AUTHORIZATION TO BID FORM

Addenda will be published to our Bid Letting page in the same manner as the plans and specifications. It is the sole responsibility of the plan holders to periodically check the website for plan addenda.

**ALL BIDDERS PLANNING TO PLACE A BID MUST FILL OUT THIS FORM TO BE AUTHORIZED TO BID.**

- This form must be completed, signed and either faxed to (309) 925-5533 or emailed to jsciortino@tazewell.com.
- Failure to submit this completed form will result in the bid not being accepted.
- If an email address is provided a Notice of Addenda will be sent when updates are available.
- Bid results are typically posted by noon the day after the County Board meeting (last Wednesday of each month) when bids are approved.

| | |
|---|---|
| Company Name: | |
| Address: | |
| | |
| Phone: | |
| Fax: | |
| Email: | |
| Bid Letting Date: | |

**Projects Intending to Bid on:**

| Section Number: | Description: |
|---|---|
| | |
| | |
| | |
| | |
| | |

Tazewell County Highway Department
21308 Illinois Route 9
Tremont, IL 61568
p: (309) 925-5532 • f: (309) 925-5533 • jsciortino@tazewell.com

RETURN WITH BID

Illinois Department of Transportation

# Local Public Agency Formal Contract Proposal

| PROPOSAL SUBMITTED BY | | |
|---|---|---|
| Contractor's Name | | |
| Street | | P.O. Box |
| City | State | Zip Code |

STATE OF ILLINOIS

COUNTY OF TAZEWELL

(Name of City, Village, Town or Road District)

FOR THE IMPROVEMENT OF

STREET NAME OR ROUTE NO. SPRING LAKE RD. (CH 21)

SECTION NO. 16-00000-05-GM

TYPES OF FUNDS MFT

☒ SPECIFICATIONS (required) ☒ PLANS (required)

**For Municipal Projects**

Submitted/Approved/Passed

☐ Mayor ☐ President of Board of Trustees ☐ Municipal Official

Date

**Department of Transportation**

☒ Released for bid based on limited review

Agreement of Understanding

Regional Engineer

4/4/2016

Date

**For County and Road District Projects**

Submitted/Approved

Highway Commissioner

Date

Submitted/Approved

Craig Tinch

County Engineer/Superintendent of Highways

03-22-2016

Date

**Note**: All proposal documents, including Proposal Guaranty Checks or Proposal Bid Bonds, should be stapled together to prevent loss when bids are processed.

**RETURN WITH BID**

# NOTICE TO BIDDERS

County TAZEWELL
Local Public Agency TAZEWELL COUNTY
Section Number 16-00000-05-GM
Route CH 21

Sealed proposals for the improvement described below will be received at the office of the Tazewell County Enginee,
21308 IL Route 9, Tremont, IL 61568 (Address) until 8:00 AM (Time) on April 18, 2016 (Date)

Sealed proposals will be opened and read publicly at the office of the Tazewell County Enginee
21308 IL Route 9, Tremont, IL 61568 (Address) at 8:00 AM (Time) on April 18, 2016 (Date)

DESCRIPTION OF WORK

Name Section 16-00000-05-GM Length: 21615.00 feet ( 4.09 miles)
Location SPRING LAKE RD. (CH 21)
Proposed Improvement Cape Seal on Spring Lake Rd. (CH 21).

1. Plans and proposal forms will be available in the office of the Tazewell County Engineer
21308 IL Route 9, Tremont, IL 61568 (Address)

2. ☒ Prequalification
If checked, the 2 low bidders must file within 24 hours after the letting an "Affidavit of Availability" (Form BC 57), in duplicate, showing all uncompleted contracts awarded to them and all low bids pending award for Federal, State, County, Municipal and private work. One original shall be filed with the Awarding Authority and one original with the IDOT District Office.

3. The Awarding Authority reserves the right to waive technicalities and to reject any or all proposals as provided in BLRS Special Provision for Bidding Requirements and Conditions for Contract Proposals.

4. The following BLR Forms shall be returned by the bidder to the Awarding Authority:
   a. BLR 12200: Local Public Agency Formal Contract Proposal
   b. BLR 12200a Schedule of Prices
   c. BLR 12230: Proposal Bid Bond (if applicable)
   d. BLR 12325: Apprenticeship or Training Program Certification (**do not use for federally funded projects**)
   e. BLR 12326: Affidavit of Illinois Business Office

5. The quantities appearing in the bid schedule are approximate and are prepared for the comparison of bids. Payment to the Contractor will be made only for the actual quantities of work performed and accepted or materials furnished according to the contract. The scheduled quantities of work to be done and materials to be furnished may be increased, decreased or omitted as hereinafter provided.

6. Submission of a bid shall be conclusive assurance and warranty the bidder has examined the plans and understands all requirements for the performance of work. The bidder will be responsible for all errors in the proposal resulting from failure or neglect to conduct an in depth examination. The Awarding Authority will, in no case be responsible for any costs, expenses, losses or changes in anticipated profits resulting from such failure or neglect of the bidder.

7. The bidder shall take no advantage of any error or omission in the proposal and advertised contract.

8. If a special envelope is supplied by the Awarding Authority, each proposal should be submitted in that envelope furnished by the Awarding Agency and the blank spaces on the envelope shall be filled in correctly to clearly indicate its contents. When an envelope other than the special one furnished by the Awarding Authority is used, it shall be marked to clearly indicate its contents. When sent by mail, the sealed proposal shall be addressed to the Awarding Authority at the address and in care of the official in whose office the bids are to be received. All proposals shall be filed prior to the time and at the place specified in the Notice to Bidders. Proposals received after the time specified will be returned to the bidder unopened.

9. Permission will be given to a bidder to withdraw a proposal if the bidder makes the request in writing or in person before the time for opening proposals.

**RETURN WITH BID**

# PROPOSAL

County TAZEWELL
Local Public Agency TAZEWELL COUNTY
Section Number 16-00000-05-GM
Route CH 21

1. Proposal of _____

   for the improvement of the above section by the construction of a Cape Seal on Spring Lake Rd. (CH 21)

   a total distance of 21615.00 feet, of which a distance of 21615.00 feet, ( 4.090 miles) are to be improved.

2. The plans for the proposed work are those prepared by the Tazewell County Highway Department and approved by the Department of Transportation on _____

3. The specifications referred to herein are those prepared by the Department of Transportation and designated as "Standard Specifications for Road and Bridge Construction" and the "Supplemental Specifications and Recurring Special Provisions" thereto, adopted and in effect on the date of invitation for bids.

4. The undersigned agrees to accept, as part of the contract, the applicable Special Provisions indicated on the "Check Sheet for Recurring Special Provisions" contained in this proposal.

5. The undersigned agrees to complete the work within 20 working days or by _____ unless additional time is granted in accordance with the specifications.

6. A proposal guaranty in the proper amount, as specified in BLRS Special Provision for Bidding Requirements and Conditions for Contract Proposals, will be required. Bid Bonds will be allowed as a proposal guaranty. Accompanying this proposal is either a bid bond if allowed, on Department form BLR 12230 or a proposal guaranty check, complying with the specifications, made payable to:

   County Treasurer of Tazewell County

   The amount of the check is _____ ( _____ ).

7. In the event that one proposal guaranty check is intended to cover two or more proposals, the amount must be equal to the sum of the proposal guaranties, which would be required for each individual proposal. If the proposal guaranty check is placed in another proposal, it will be found in the proposal for: Section Number _____.

8. The successful bidder at the time of execution of the contract will be required to deposit a contract bond for the full amount of the award. When a contract bond is not required, the proposal guaranty check will be held in lieu thereof. If this proposal is accepted and the undersigned fails to execute a contract and contract bond as required, it is hereby agreed that the Bid Bond or check shall be forfeited to the Awarding Authority.

9. Each pay item should have a unit price and a total price. If no total price is shown or if there is a discrepancy between the product of the unit price multiplied by the quantity, the unit price shall govern. If a unit price is omitted, the total price will be divided by the quantity in order to establish a unit price.

10. A bid will be declared unacceptable if neither a unit price nor a total price is shown.

11. The undersigned submits herewith the schedule of prices on BLR 12200a covering the work to be performed under this contract.

12. The undersigned further agrees that if awarded the contract for the sections contained in the combinations on BLR 12200a, the work shall be in accordance with the requirements of each individual proposal for the multiple bid specified in the Schedule for Multiple Bids below.

RETURN WITH BID

Illinois Department of Transportation

# SCHEDULE OF PRICES

County TAZEWELL
Local Public Agency TAZEWELL COUNTY
Section 16-00000-05-GM
Route CH 21

**Schedule for Multiple Bids**

| Combination Letter | Sections Included in Combinations | Total |
|---|---|---|
| | | |
| | | |
| | | |
| | | |

**Schedule for Single Bid**

(For complete information covering these items, see plans and specifications)

Bidder's Proposal for making Entire Improvements

| Item No. | Items | Unit | Quantity | Unit Price | Total |
|---|---|---|---|---|---|
| 1 | CAPE SEAL | SQ YD | 53394 | | |
| 2 | INCIDENTAL CAPE SEAL | SQ YD | 3565 | | |
| 3 | SHORT-TERM PAVT MRKING: | FOOT | 6492 | | |
| 4 | RAISED REFL PAVT MRK REM | EACH | 271 | | |
| 5 | RAISED REFL PAVT MRKER | EACH | 271 | | |
| 6 | TRAF CONT & PROT SPL: | L SUM | 1 | | |
| 7 | MOBILIZATION: | L SUM | 1 | | |

## CONTRACTOR CERTIFICATIONS

| | |
|---|---|
| County | TAZEWELL |
| Local Public Agency | TAZEWELL COUNTY |
| Section Number | 16-00000-05-GM |
| Route | CH 21 |

The certifications hereinafter made by the bidder are each a material representation of fact upon which reliance is placed should the Department enter into the contract with the bidder.

1. **Debt Deliquency.** The bidder or contractor or subcontractor, respectively, certifies that it is not delinquent in the payment of any tax administered by the Department of Revenue unless the individual or other entity is contesting, in accordance with the procedures established by the appropriate revenue Act, its liability for the tax or the amount of tax. Making a false statement voids the contract and allows the Department to recover all amounts paid to the individual or entity under the contract in a civil action.

2. **Bid-Rigging or Bid Rotating.** The bidder or contractor or subcontractor, respectively, certifies that it is not barred from contracting with the Department by reason of a violation of either 720 ILCS 5/33E-3 or 720 ILCS 5/33E-4.

   A violation of Section 33E-3 would be represented by a conviction of the crime of bid-rigging which, in addition to Class 3 felony sentencing, provides that any person convicted of this offense or any similar offense of any state or the United States which contains the same elements as this offense shall be barred for 5 years from the date of conviction from contracting with any unit of State or local government. No corporation shall be barred from contracting with any unit of State or local government as a result of a conviction under this Section of any employee or agent of such corporation if the employee so convicted is no longer employed by the corporation and: (1) it has been finally adjudicated not guilty or (2) if it demonstrates to the governmental entity with which it seeks to contract and that entity finds that the commission of the offense was neither authorized, requested, commanded, nor performed by a director, officer or a high managerial agent in behalf of the corporation.

   A violation of Section 33E-4 would be represented by a conviction of the crime of bid-rotating which, in addition to Class 2 felony sentencing, provides that any person convicted of this offense or any similar offense of any state or the United States which contains the same elements as this offense shall be permanently barred from contracting with any unit of State or local government. No corporation shall be barred from contracting with any unit of State or local government as a result of a conviction under this Section of any employee or agent of such corporation if the employee so convicted is no longer employed by the corporation and: (1) it has been finally adjudicated not guilty or (2) if it demonstrates to the governmental entity with which it seeks to contract and that entity finds that the commission of the offense was neither authorized, requested, commanded, nor performed by a director, officer or a high managerial agent in behalf of the corporation.

3. **Bribery.** The bidder or contractor or subcontractor, respectively, certifies that it has not been convicted of bribery or attempting to bribe an officer or employee of the State of Illinois or any unit of local government, nor has the firm made an admission of guilt of such conduct which is a matter of record, nor has an official, agent, or employee of the firm committed bribery or attempted bribery on behalf of the firm and pursuant to the direction or authorization of a responsible official of the firm.

4. **Interim Suspension or Suspension.** The bidder or contractor or subcontractor, respectively, certifies that it is not currently under a suspension as defined in Subpart I of Title 44 Subtitle A Chapter III Part 6 of the Illinois Administrative Code. Furthermore, if suspended prior to completion of this work, the contract or contracts executed for the completion of this work may be cancelled.

County TAZEWELL
Local Public Agency TAZEWELL COUNTY
Section Number 16-00000-05-GM
Route CH 21

## SIGNATURES

(If an individual)

Signature of Bidder _____

Business Address _____

(If a partnership)

Firm Name _____

Signed By _____

Business Address _____

Inset Names and Addressed of All Partners _____

(If a corporation)

Corporate Name _____

Signed By _____
President

Business Address _____

Insert Names of Officers
President _____
Secretary _____
Treasurer _____

Attest: _____
Secretary

Illinois Department of Transportation

# Local Agency Proposal Bid Bond

Route CH 21
County TAZEWELL
Local Agency TAZEWELL COUNTY
Section 16-00000-05-GM

**RETURN WITH BID**

## PAPER BID BOND

WE _____ as PRINCIPAL,

and _____ as SURETY,

are held jointly, severally and firmly bound unto the above Local Agency (hereafter referred to as "LA") in the penal sum of 5% of the total bid price, or for the amount specified in the proposal documents in effect on the date of invitation for bids whichever is the lesser sum. We bind ourselves, our heirs, executors, administrators, successors, and assigns, jointly pay to the LA this sum under the conditions of this instrument.

WHEREAS THE CONDITION OF THE FOREGOING OBLIGATION IS SUCH that, the said PRINCIPAL is submitting a written proposal to the LA acting through its awarding authority for the construction of the work designated as the above section.

THEREFORE if the proposal is accepted and a contract awarded to the PRINCIPAL by the LA for the above designated section and the PRINCIPAL shall within fifteen (15) days after award enter into a formal contract, furnish surety guaranteeing the faithful performance of the work, and furnish evidence of the required insurance coverage, all as provided in the "Standard Specifications for Road and Bridge Construction" and applicable Supplemental Specifications, then this obligation shall become void; otherwise it shall remain in full force and effect.

IN THE EVENT the LA determines the PRINCIPAL has failed to enter into a formal contract in compliance with any requirements set forth in the preceding paragraph, then the LA acting through its awarding authority shall immediately be entitled to recover the full penal sum set out above, together with all court costs, all attorney fees, and any other expense of recovery.

IN TESTIMONY WHEREOF, the said PRINCIPAL and the said SURETY have caused this instrument to be signed by their respective officers this _____ day of _____

**Principal**

_____ (Company Name) _____ (Company Name)

By: _____ (Signature and Title) By: _____ (Signature and Title)

(If PRINCIPLE is a joint venture of two or more contractors, the company names, and authorized signatures of each contractor must be affixed.)

**Surety**

_____ (Name of Surety) By: _____ (Signature of Attorney-in-Fact)

STATE OF ILLINOIS,
COUNTY OF _____

I. _____, a Notary Public in and for said county,
do hereby certify that _____
( Insert names of individuals signing on behalf of PRINCIPAL & SURETY)

who are each personally known to me to be the same persons whose names are subscribed to the foregoing instrument on behalf of PRINCIPAL and SURETY, appeared before me this day in person and acknowledged respectively, that they signed and delivered said instruments as their free and voluntary act for the uses and purposes therein set forth.

Given under my hand and notarial seal this _____ day of _____

My commission expires _____ _____ (Notary Public)

## ELECTRONIC BID BOND

☐ **Electronic bid bond is allowed (box must be checked by LA if electronic bid bond is allowed)**

The Principal may submit an electronic bid bond, in lieu of completing the above section of the Proposal Bid Bond Form. By providing an electronic bid bond ID code and signing below, the Principal is ensuring the identified electronic bid bond has been executed and the Principal and Surety are firmly bound unto the LA under the conditions of the bid bond as shown above. (If PRINCIPAL is a joint venture of two or more contractors, an electronic bid bond ID code, company/Bidder name title and date must be affixed for each contractor in the venture.)

| | | | | | | | | | | | |
|---|---|---|---|---|---|---|---|---|---|---|---|
| | | | | | | | | | | | |

Electronic Bid Bond ID Code

_____ (Company/Bidder Name)

_____ (Signature and Title) _____ Date



BLR 12230 (Rev. 7/05

Illinois Department of Transportation

Bureau of Construction
2300 South Dirksen Parkway/Room 322
Springfield, Illinois 62764

# Affidavit of Availability
## For the Letting of _____

**Instructions:** Complete this form by either typing or using black ink. "Authorization to Bid" will not be issued unless both sides of this form are completed in detail. Use additional forms as needed to list all work.

**Part I. Work Under Contract**

List below all work you have under contract as either a prime contractor or a subcontractor. It is required to include all pending low bids not yet awarded or rejected. In a joint venture, list only that portion of the work which is the responsibility of your company. The uncompleted dollar value is to be based upon the most recent engineer's or owners estimate, and must include work subcontracted to others. If no work is contracted, show **NONE.**

| | 1 | 2 | 3 | 4 | Awards Pending | |
|---|---|---|---|---|---|---|
| Contract Number | | | | | | |
| Contract With | | | | | | |
| Estimated Completion Date | | | | | | |
| Total Contract Price | | | | | | Accumulated Totals |
| Uncompleted Dollar Value if Firm is the Prime Contractor | | | | | | |
| Uncompleted Dollar Value if Firm is the Subcontractor | | | | | | |
| | | | | Total Value of All Work | | |

**Part II. Awards Pending and Uncompleted Work to be done with your own forces.**

List below the uncompleted dollar value of work for each contract and awards pending to be completed with your own forces. All work subcontracted to others will be listed on the reverse of this form. In a joint venture, list only that portion of the work to be done by your company. If no work is contracted, show NONE.

| | | | | | | Accumulated Totals |
|---|---|---|---|---|---|---|
| Earthwork | | | | | | |
| Portland Cement Concrete Paving | | | | | | |
| HMA Plant Mix | | | | | | |
| HMA Paving | | | | | | |
| Clean & Seal Cracks/Joints | | | | | | |
| Aggregate Bases & Surfaces | | | | | | |
| Highway, R.R. and Waterway Structures | | | | | | |
| Drainage | | | | | | |
| Electrical | | | | | | |
| Cover and Seal Coats | | | | | | |
| Concrete Construction | | | | | | |
| Landscaping | | | | | | |
| Fencing | | | | | | |
| Guardrail | | | | | | |
| Painting | | | | | | |
| Signing | | | | | | |
| Cold Milling, Planning & Rotomilling | | | | | | |
| Demolition | | | | | | |
| Pavement Markings (Paint) | | | | | | |
| Other Construction (List) | | | | | | |
| | | | | | | $ 0.00 |
| Totals | | | | | | |

Disclosure of this information is **REQUIRED** to accomplish the statutory purpose as outlined in the "Illinois Procurement Code." Failure to comply will result in non-issuance of an "Authorization To Bid." This form has been approved by the State Forms Management Center.

**Part III. Work Subcontracted to Others.**

For each contract described in Part I, list all the work you have subcontracted to others.

| | 1 | 2 | 3 | 4 | Awards Pending |
|---|---|---|---|---|---|
| Subcontractor | | | | | |
| Type of Work | | | | | |
| Subcontract Price | | | | | |
| Amount Uncompleted | | | | | |
| Subcontractor | | | | | |
| Type of Work | | | | | |
| Subcontract Price | | | | | |
| Amount Uncompleted | | | | | |
| Subcontractor | | | | | |
| Type of Work | | | | | |
| Subcontract Price | | | | | |
| Amount Uncompleted | | | | | |
| Subcontractor | | | | | |
| Type of Work | | | | | |
| Subcontract Price | | | | | |
| Amount Uncompleted | | | | | |
| Subcontractor | | | | | |
| Type of Work | | | | | |
| Subcontract Price | | | | | |
| Amount Uncompleted | | | | | |
| Total Uncompleted | | | | | |

I, being duly sworn, do hereby declare that this affidavit is a true and correct statement relating to ALL uncompleted contracts of the undersigned for Federal, State, County, City and private work, including ALL subcontract work, ALL pending low bids not yet awarded or rejected and ALL estimated completion dates.

Subscribed and sworn to before me

this _____ day of _____ , _____ Type or Print Name _____

Officer or Director Title

_____ Signed _____

Notary Public

My commission expires _____

Company _____

(Notary Seal)

Address _____

_____

Illinois Department of Transportation

# Apprenticeship or Training Program Certification

**Return with Bid**

| | |
|---|---|
| Route | CH 21 |
| County | TAZEWELL |
| Local Agency | TAZEWELL COUNTY |
| Section | 16-00000-05-GM |

***All contractors are required to complete the following certification***:

☒ For this contract proposal or for all groups in this deliver and install proposal.

☐ For the following deliver and install groups in this material proposal:

Illinois Department of Transportation policy, adopted in accordance with the provisions of the Illinois Highway Code, requires this contract to be awarded to the lowest responsive and responsible bidder. The award decision is subject to approval by the Department. In addition to all other responsibility factors, this contract or deliver and install proposal requires all bidders and all bidders' subcontractors to disclose participation in apprenticeship or training programs that are (1) approved by and registered with the United States Department of Labor's Bureau of Apprenticeship and Training, and (2) applicable to the work of the above indicated proposals or groups. Therefore, all bidders are required to complete the following certification:

I. Except as provided in paragraph IV below, the undersigned bidder certifies that it is a participant, either as an individual or as part of a group program, in an approved apprenticeship or training program applicable to each type of work or craft that the bidder will perform with its own employees.

II. The undersigned bidder further certifies for work to be performed by subcontract that each of its subcontractors submitted for approval either (A) is, at the time of such bid, participating in an approved, applicable apprenticeship or training program; or (B) will, prior to commencement of performance of work pursuant to this contract, establish participation in an approved apprenticeship or training program applicable to the work of the subcontract.

III. The undersigned bidder, by inclusion in the list in the space below, certifies the official name of each program sponsor holding the Certificate of Registration for all of the types of work or crafts in which the bidder is a participant and that will be performed with the bidder's employees. Types of work or craft that will be subcontracted shall be included and listed as subcontract work. The list shall also indicate any type of work or craft job category for which there is no applicable apprenticeship or training program available.

IV. Except for any work identified above, any bidder or subcontractor that shall perform all or part of the work of the contract or deliver and install proposal solely by individual owners, partners or members and not by employees to whom the payment of prevailing rates of wages would be required, check the following box, and identify the owner/operator workforce and positions of ownership. ☐

_____
_____
_____
_____
_____

The requirements of this certification and disclosure are a material part of the contract, and the contractor shall require this certification provision to be included in all approved subcontracts. The bidder is responsible for making a complete report and shall make certain that each type of work or craft job category that will be utilized on the project is accounted for and listed. The Department at any time before or after award may require the production of a copy of each applicable Certificate of Registration issued by the United States Department of Labor evidencing such participation by the contractor and any or all of its subcontractors. In order to fulfill the participation requirement, it shall not be necessary that any applicable program sponsor be currently taking or that it will take applications for apprenticeship, training or employment during the performance of the work of this contract or deliver and install proposal.

Bidder: _____ By: _____
(Signature)

Address: _____ Title: _____

**RETURN WITH BID**

Illinois Department of Transportation

## Affidavit of Illinois Business Office

County TAZEWELL
Local Public Agency TAZEWELL COUNTY
Section Number 16-00000-05-GM
Route CH 21

State of _____ )
) ss.
County of _____ )

I, _____ of _____ , _____ ,
(Name of Affiant) (City of Affiant) (State of Affiant

being first duly sworn upon oath, states as follows:

1. That I am the _____ of _____ .
   officer or position bidder
2. That I have personal knowledge of the facts herein stated.
3. That, if selected under this proposal, _____ , will maintain a
   (bidder)

   business office in the State of Illinois which will be located in _____ County, Illinois.
4. That this business office will serve as the primary place of employment for any persons employed in the construction contemplated by this proposal.
5. That this Affidavit is given as a requirement of state law as provided in Section 30-22(8) of the Illinois Procurement Code.

_____
(Signature)

_____
(Print Name of Affiant)

This instrument was acknowledged before me on day of _____ , _____ .

(SEAL)

_____
(Signature of Notary Public)

INDEX
FOR
SUPPLEMENTAL SPECIFICATIONS
AND RECURRING SPECIAL PROVISIONS

Adopted April 1, 2016

This index contains a listing of SUPPLEMENTAL SPECIFICATIONS, frequently used RECURRING SPECIAL PROVISIONS, and LOCAL ROADS AND STREETS RECURRING SPECIAL PROVISIONS.

No ERRATA this year.

SUPPLEMENTAL SPECIFICATIONS


Std. Spec. Sec. Page No.

No Supplemental Specifications this year.

CHECK SHEET
FOR
RECURRING SPECIAL PROVISIONS

Adopted April 1, 2016

The following RECURRING SPECIAL PROVISIONS indicated by an "X" are applicable to this contract and are included by reference:

RECURRING SPECIAL PROVISIONS


| CHECK SHEET # | | | PAGE NO. |
|---|---|---|---|
| 1 | ☐ | Additional State Requirements for Federal-Aid Construction Contracts | 1 |
| 2 | ☐ | Subletting of Contracts (Federal-Aid Contracts) | 4 |
| 3 | ☐ | EEO | 5 |
| 4 | ☐ | Specific EEO Responsibilities Non Federal-Aid Contracts | 15 |
| 5 | ☐ | Required Provisions - State Contracts | 20 |
| 6 | ☐ | Asbestos Bearing Pad Removal | 26 |
| 7 | ☐ | Asbestos Waterproofing Membrane and Asbestos Hot-Mix Asphalt Surface Removal | 27 |
| 8 | ☐ | Temporary Stream Crossings and In-Stream Work Pads | 28 |
| 9 | ☐ | Construction Layout Stakes Except for Bridges | 29 |
| 10 | ☐ | Construction Layout Stakes | 32 |
| 11 | ☐ | Use of Geotextile Fabric for Railroad Crossing | 35 |
| 12 | ☐ | Subsealing of Concrete Pavements | 37 |
| 13 | ☐ | Hot-Mix Asphalt Surface Correction | 41 |
| 14 | ☐ | Pavement and Shoulder Resurfacing | 43 |
| 15 | ☐ | Patching with Hot-Mix Asphalt Overlay Removal | 44 |
| 16 | ☐ | Polymer Concrete | 45 |
| 17 | ☐ | PVC Pipeliner | 47 |
| 18 | ☐ | Bicycle Racks | 48 |
| 19 | ☐ | Temporary Portable Bridge Traffic Signals | 50 |
| 20 | ☐ | Work Zone Public Information Signs | 52 |
| 21 | ☐ | Nighttime Inspection of Roadway Lighting | 53 |
| 22 | ☐ | English Substitution of Metric Bolts | 54 |
| 23 | ☐ | Calcium Chloride Accelerator for Portland Cement Concrete | 55 |
| 24 | ☐ | Quality Control of Concrete Mixtures at the Plant | 56 |
| 25 | ☐ | Quality Control/Quality Assurance of Concrete Mixtures | 64 |
| 26 | ☐ | Digital Terrain Modeling for Earthwork Calculations | 80 |
| 27 | ☐ | Pavement Marking Removal | 82 |
| 28 | ☐ | Preventive Maintenance – Bituminous Surface Treatment | 83 |
| 29 | ☒ | Preventive Maintenance – Cape Seal | 89 |
| 30 | ☐ | Preventive Maintenance – Micro-Surfacing | 104 |
| 31 | ☐ | Preventive Maintenance – Slurry Seal | 115 |
| 32 | ☐ | Temporary Raised Pavement Markers | 125 |
| 33 | ☐ | Restoring Bridge Approach Pavements Using High-Density Foam | 126 |

CHECK SHEET
FOR
LOCAL ROADS AND STREETS RECURRING SPECIAL PROVISIONS

Adopted April 1, 2016

The following LOCAL ROADS AND STREETS RECURRING SPECIAL PROVISIONS indicated by an "X" are applicable to this contract and are included by reference:

LOCAL ROADS AND STREETS RECURRING SPECIAL PROVISIONS


| CHECK SHEET # | | | PAGE NO. |
|---|---|---|---|
| LRS 1 | | **Reserved** | 130 |
| LRS 2 | ☐ | Furnished Excavation | 131 |
| LRS 3 | ☒ | Work Zone Traffic Control Surveillance | 132 |
| LRS 4 | ☒ | Flaggers in Work Zones | 133 |
| LRS 5 | ☒ | Contract Claims | 134 |
| LRS 6 | ☒ | Bidding Requirements and Conditions for Contract Proposals | 135 |
| LRS 7 | ☐ | Bidding Requirements and Conditions for Material Proposals | 141 |
| LRS 8 | | **Reserved** | 147 |
| LRS 9 | ☐ | Bituminous Surface Treatments | 148 |
| LRS 10 | | **Reserved** | 149 |
| LRS 11 | ☒ | Employment Practices | 150 |
| LRS 12 | ☒ | Wages of Employees on Public Works | 152 |
| LRS 13 | ☒ | Selection of Labor | 154 |
| LRS 14 | ☐ | Paving Brick and Concrete Paver Pavements and Sidewalks | 155 |
| LRS 15 | ☒ | Partial Payments | 158 |
| LRS 16 | ☐ | Protests on Local Lettings | 159 |
| LRS 17 | ☒ | Substance Abuse Prevention Program | 160 |
| LRS 18 | ☐ | Multigrade Cold Mix Asphalt | 161 |

# TABLE OF CONTENTS

SPECIAL PROVISIONS

Description of Work . . . . . 1

Traffic Control Plan . . . . . 1

Cape Seal Treatment . . . . . 2

Raised Reflective Pavement Marking Removal. . . . . 2

Work Zone Pavement Marking. . . . . 2

Weight Limits . . . . . 2

Bridge Weight Limits. . . . . 2

General Notes . . . . . 2

BDE SPECIAL PROVISIONS . . . . . 3-10

LRS SPECIAL PROVISIONS . . . . . 11

LOCATION MAP . . . . . 12

SUMMARY OF QUANTITIES . . . . . 13

SPRING LAKE RD. – QUANTITIES . . . . . 14

SPRING LAKE RD. – CROSS SECTION . . . . . 15

ENTRANCE STANDARD . . . . . 16

HIGHWAY STANDARD 701301 . . . . . 17

HIGHWAY STANDARD 701306 . . . . . 18

HIGHWAY STANDARD 701901 . . . . . 19-21

HIGHWAY STANDARD 781001 . . . . . 22

# TABLE OF CONTENTS

SPECIAL PROVISIONS

Description of Work . . . . . 1

Traffic Control Plan . . . . . 1

Cape Seal Treatment . . . . . 2

Raised Reflective Pavement Marking Removal. . . . . 2

Work Zone Pavement Marking. . . . . 2

Weight Limits . . . . . 2

Bridge Weight Limits. . . . . 2

General Notes . . . . . 2

BDE SPECIAL PROVISIONS . . . . . 3-10

LRS SPECIAL PROVISIONS . . . . . 11-12

LOCATION MAP . . . . . 13

SUMMARY OF QUANTITIES . . . . . 14

SPRING LAKE RD. – QUANTITIES . . . . . 15

SPRING LAKE RD. – CROSS SECTION . . . . . 16

ENTRANCE STANDARD . . . . . 17

HIGHWAY STANDARD 701301 . . . . . 18

HIGHWAY STANDARD 701306 . . . . . 19

HIGHWAY STANDARD 701901 . . . . . 20-22

HIGHWAY STANDARD 781001 . . . . . 23

# TAZEWELL COUNTY ILLINOIS
# SPECIAL PROVISIONS

The following Special Provisions supplement the "Standard Specifications for Road and Bridge Construction", adopted April 1, 2016, the latest edition of the " Manual on Uniform Traffic Control Devices for Streets and Highways", and the "Manual of Test Procedures of Materials" in effect on the date of invitation for bids, and the Supplemental Specifications and Recurring Special Provisions indicated on the Check Sheet included here in which apply to and govern the construction of **Section 16-00000-05-GM,** and in case of conflict with any part, or parts of, said Specifications, the said Special Provisions shall take precedence and shall govern.

**DESCRIPTION OF WORK**: The work of this section consists of a cape seal on Spring Lake Rd. (CH 21).

**TRAFFIC CONTROL PLAN**: Traffic Control shall be in accordance with the applicable sections of the Standard Specifications for Road and Bridge Construction, the applicable guidelines contained in the Illinois Manual on Uniform Traffic Control Devices for Streets and Highways, these Special Provisions, and any special details and Highway Standards contained herein and in the plans and the Standard Specifications for Traffic Control Items.

At the pre-construction meeting, the Contractor shall furnish the name of the individual in his direct employ who is to be responsible for the installation and maintenance of the traffic control for this project. If the actual installation and maintenance are to be accomplished by a subcontractor, consent shall be requested of the Engineer at the time of the pre-construction meeting in accordance with Article 108.01 of the Standard Specifications for Road and Bridge Construction. This shall not relieve the Contractor of the foregoing requirement for a responsible individual in his direct employ. The County will provide the Contractor the name of its representative who will be responsible for the administration of the Traffic Control Plan. Special attention is called to Articles 107.09, 107.14, 107.15, 1095.06, 1106 of the Standard Specifications for Road and Bridge Construction and the and Bridge Construction and the following Highway Standards and Special Provisions relating to Traffic Control.

Special attention is also called to the Highway Standards, 701301, 701306, and 701901 contained herein.

The entire project shall be kept open to through traffic.

Contractor shall post the roadway with "LOOSE GRAVEL" and "SPEED LIMIT 35" signs immediately prior to sealcoat operations in accordance with applicable articles of Division 700 of the Standard Specifications. These signs shall be placed at the start of the work, near intersecting roadways and then at an average spacing of 0.5 mi (0.8 km). The signs may be removed as soon as the sweeping operation has been completed.

"NO PASSING ZONES NOT STRIPED NEXT____ MILES" signs shall be posted in accordance with Article 701.17.

The presence of temporary traffic control drawings or standards in the proposal or contract, whether a pay item or not, does not relieve the Contractor of his obligation to the public. The Contractor shall provide, if conditions warrant by the Engineer, all protection deemed necessary beyond that shown in the proposal or Special Provisions.

Construction signs shall meet the current Standard Specifications for Traffic Control Items.

Basis of Payment: All required Traffic Control shall be paid for at the contract-lump sum price for TRAFFIC CONTROL AND PROTECTION, SPECIAL.

# TAZEWELL COUNTY ILLINOIS
# SPECIAL PROVISIONS

**CAPE SEAL TREATMENT:**

The materials for the A-1 surface shall be CA 20.

The Micro-Surfacing Application for the Roadway and Shoulders shall be Double Pass, Type II, 20 lb./Sq. Yd. per Pass.

The Micro-Surfacing Application for Sideroads, Entrances, and Mailboxes shall be Single Pass, Type II, 24 lb./Sq. Yd.

The aggregate for the Micro-Surfacing shall meet the friction aggregate requirements for the Mixture C in Article 1004.03(a) with a minimum of 75% Steel Slag Sand Type II @ minimum of 24 lb/Sq. Yd. for single pass application.

Basis of Payment: Cape seal for the Roadway and Shoulders shall be paid for at the contract unit price per square yard for CAPE SEAL. Cape seal for the Sideroads, Entrances, and Mailboxes shall be paid for at the contract unit price per square yard for INCIDENTAL CAPE SEAL.

**RAISED REFLECTIVE PAVEMENT MARKER REMOVAL:** The existing Raised Reflective Pavement Markers shall be removed prior to the Cape Seal Application. The hole resulting from the removal shall be filled with cold mixed material (UPM or equivalent) approved by the Engineer. This work shall be included in the cost of RAISED REFLECTIVE PAVEMENT MARKER REMOVAL.

**WORK ZONE PAVEMENT MARKING:** Section 703 of the Standard Specifications shall apply with the following changes and stipulations:

Permanent pavement markings will be applied by others, therefore the Contractor will not be responsible for replacing short - term markings with temporary or permanent pavement markings. The Contractor will be responsible for maintaining short - term markings for 30 days or until permanent pavement markings are applied whichever is first.

Article 703.02 Materials. Material shall be Paint Pavement Markings.

**WEIGHT LIMITS:** Legal weight limits shall be observed on Tazewell County highways and the structures they contain at all times. The Contractor shall apply for overweight and over dimension permits in advance to avoid delays in work.

**BRIDGE WEIGHT LIMITS:** Any loads traveling over a county structure over legal weight shall require a load rating be done to ensure that the structure has adequate capacity to support the load.

**GENERAL NOTES:** Where section or subsection monuments are encountered, the Engineer shall be notified before such monuments are removed. The Contractor shall protect and carefully preserve all property markers and monuments until the owner, and authorized surveyor or agent has witnessed or otherwise referenced their location.

BDE SPECIAL PROVISIONS
For the April 22 and June 10, 2016 Lettings

The following special provisions indicated by an "x" are applicable to this contract and will be included by the Project Development and Implementation Section of the BD&E. An * indicates a new or revised special provision for the letting.

| | File Name | # | | Special Provision Title | Effective | Revised |
|---|---|---|---|---|---|---|
| | 80099 | 1 | | Accessible Pedestrian Signals (APS) | April 1, 2003 | Jan. 1, 2014 |
| * | 80274 | 2 | | Aggregate Subgrade Improvement | April 1, 2012 | April 1, 2016 |
| | 80192 | 3 | | Automated Flagger Assistance Device | Jan. 1, 2008 | |
| | 80173 | 4 | | Bituminous Materials Cost Adjustments | Nov. 2, 2006 | July 1, 2015 |
| | 80241 | 5 | | Bridge Demolition Debris | July 1, 2009 | |
| | 5026I | 6 | | Building Removal-Case I (Non-Friable and Friable Asbestos) | Sept. 1, 1990 | April 1, 2010 |
| | 5048I | 7 | | Building Removal-Case II (Non-Friable Asbestos) | Sept. 1, 1990 | April 1, 2010 |
| | 5049I | 8 | | Building Removal-Case III (Friable Asbestos) | Sept. 1, 1990 | April 1, 2010 |
| | 5053I | 9 | | Building Removal-Case IV (No Asbestos) | Sept. 1, 1990 | April 1, 2010 |
| | 80360 | 10 | | Coarse Aggregate Quality | July 1, 2015 | |
| | 80198 | 11 | | Completion Date (via calendar days) | April 1, 2008 | |
| | 80199 | 12 | | Completion Date (via calendar days) Plus Working Days | April 1, 2008 | |
| | 80293 | 13 | | Concrete Box Culverts with Skews > 30 Degrees and Design Fills ≤ 5 Feet | April 1, 2012 | April 1, 2015 |
| * | 80311 | 14 | | Concrete End Sections for Pipe Culverts | Jan. 1, 2013 | April 1, 2016 |
| * | 80277 | 15 | | Concrete Mix Design – Department Provided | Jan. 1, 2012 | April 1, 2016 |
| | 80261 | 16 | | Construction Air Quality – Diesel Retrofit | June 1, 2010 | Nov. 1, 2014 |
| * | 80029 | 17 | | Disadvantaged Business Enterprise Participation | Sept. 1, 2000 | Jan. 2, 2016 |
| * | 80363 | 18 | | Engineer's Field Office | April 1, 2016 | |
| | 80358 | 19 | | Equal Employment Opportunity | April 1, 2015 | |
| * | 80364 | 20 | ✔ | Errata for the 2016 Standard Specifications | April 1, 2016 | |
| | 80229 | 21 | | Fuel Cost Adjustment | April 1, 2009 | July 1, 2015 |
| | 80304 | 22 | | Grooving for Recessed Pavement Markings | Nov. 1, 2012 | Aug. 1, 2014 |
| * | 80246 | 23 | | Hot-Mix Asphalt – Density Testing of Longitudinal Joints | Jan. 1, 2010 | April 1, 2016 |
| * | 80347 | 24 | | Hot-Mix Asphalt – Pay for Performance Using Percent Within Limits – Jobsite Sampling | Nov. 1, 2014 | April 1, 2016 |
| * | 80336 | 25 | | Longitudinal Joint and Crack Patching | April 1, 2014 | April 1, 2016 |
| | 80045 | 26 | | Material Transfer Device | June 15, 1999 | Aug. 1, 2014 |
| * | 80342 | 27 | | Mechanical Side Tie Bar Inserter | Aug. 1, 2014 | April 1, 2016 |
| | 80165 | 28 | | Moisture Cured Urethane Paint System | Nov. 1, 2006 | Jan. 1, 2010 |
| * | 80361 | 29 | | Overhead Sign Structures Certification of Metal Fabricator | Nov. 1, 2015 | April 1, 2016 |
| * | 80349 | 30 | | Pavement Marking Blackout Tape | Nov. 1, 2014 | April 1, 2016 |
| * | 80298 | 31 | | Pavement Marking Tape Type IV | April 1, 2012 | April 1, 2016 |
| * | 80365 | 32 | | Pedestrian Push-Button | April 1, 2016 | |
| * | 80359 | 33 | | Portland Cement Concrete Bridge Deck Curing | April 1, 2015 | April 1, 2016 |
| * | 80353 | 34 | | Portland Cement Concrete Inlay or Overlay | Jan. 1, 2015 | April 1, 2016 |
| * | 80338 | 35 | | Portland Cement Concrete Partial Depth Hot-Mix Asphalt Patching | April 1, 2014 | April 1, 2016 |
| * | 80300 | 36 | | Preformed Plastic Pavement Marking Type D - Inlaid | April 1, 2012 | April 1, 2016 |
| | 80328 | 37 | | Progress Payments | Nov. 2, 2013 | |
| | 3426I | 38 | | Railroad Protective Liability Insurance | Dec. 1, 1986 | Jan. 1, 2006 |
| | 80157 | 39 | | Railroad Protective Liability Insurance (5 and 10) | Jan. 1, 2006 | |
| * | 80306 | 40 | | Reclaimed Asphalt Pavement (RAP) and Reclaimed Asphalt Shingles (RAS) | Nov. 1, 2012 | April 1, 2016 |
| * | 80340 | 41 | | Speed Display Trailer | April 2, 2014 | April 1, 2016 |
| | 80127 | 42 | | Steel Cost Adjustment | April 2, 2004 | July 1, 2015 |
| | 80362 | 43 | | Steel Slag in Trench Backfill | Jan. 1, 2016 | |
| * | 80317 | 44 | | Surface Testing of Hot-Mix Asphalt Overlays | Jan. 1, 2013 | April 1, 2016 |

| File Name | # | | Special Provision Title | Effective | Revised |
|---|---|---|---|---|---|
| 80355 | 45 | | Temporary Concrete Barrier | Jan. 1, 2015 | July 1, 2015 |
| 20338 | 46 | | Training Special Provisions | Oct. 15, 1975 | |
| 80318 | 47 | | Traversable Pipe Grate | Jan. 1, 2013 | April 1, 2014 |
| * 80288 | 48 | | Warm Mix Asphalt | Jan. 1, 2012 | April 1, 2016 |
| 80302 | 49 | | Weekly DBE Trucking Reports | June 2, 2012 | April 2, 2015 |
| 80289 | 50 | | Wet Reflective Thermoplastic Pavement Marking | Jan. 1, 2012 | |
| 80071 | 51 | ✔ | Working Days | Jan. 1, 2002 | |

The following special provisions and recurring special provisions are in the 2016 Standard Specifications.

| File Name | Special Provision Title | New Location | Effective | Revised |
|---|---|---|---|---|
| 80240 | Above Grade Inlet Protection | Articles 280.02, 280.04, and 1081.15 | July 1, 2009 | Jan. 1, 2012 |
| 80310 | Coated Galvanized Steel Conduit | Article 811.03 | Jan. 1, 2013 | Jan. 1, 2015 |
| 80341 | Coilable Nonmetallic Conduit | Article 1088.01 | Aug. 1, 2014 | Jan. 1, 2015 |
| 80294 | Concrete Box Culverts with Skews ≤ 30 Degrees Regardless of Design Fill and Skews > 30 Degrees with Design Fills > 5 Feet | Article 540.04 | April 1, 2012 | April 1, 2014 |
| 80334 | Concrete Gutter, Curb, Median, and Paved Ditch | Articles 606.02, 606.07, and 1050.04 | April 1, 2014 | Aug. 1, 2014 |
| 80335 | Contract Claims | Article 109.09 | April 1, 2014 | |
| Chk Sht #27 | English Substitution of Metric Reinforcement Bars | Article 508.09 | April 1, 1996 | Jan. 1, 2011 |
| 80265 | Friction Aggregate | Articles 1004.01 and 1004.03 | Jan. 1, 2011 | Nov. 1, 2014 |
| 80329 | Glare Screen | Sections 638 and 1085 | Jan. 1, 2014 | |
| Chk Sht #20 | Guardrail and Barrier Wall Delineation | Sections 635, 725, 782, and 1097 | Dec. 15, 1993 | Jan. 1, 2012 |
| 80322 | Hot-Mix Asphalt – Mixture Design Composition and Volumetric Requirements | Sections 312, 355, 406, 407, 442, 482, 601, 1003, 1004, 1030, and 1102 | Nov. 1, 2013 | Nov. 1, 2014 |
| 80323 | Hot-Mix Asphalt – Mixture Design Verification and Production | Sections 406, 1030, and 1102 | Nov. 1, 2013 | Nov. 1, 2014 |
| 80348 | Hot-Mix Asphalt – Prime Coat | Sections 403, 406, 407, 408, 1032, and 1102 | Nov. 1, 2014 | |
| 80315 | Insertion Lining of Culverts | Sections 543 and 1029 | Jan. 1, 2013 | Nov. 1, 2013 |
| 80351 | Light Tower | Article 1069.08 | Jan. 1, 2015 | |
| 80324 | LRFD Pipe Culvert Burial Tables | Sections 542 and 1040 | Nov. 1, 2013 | April 1, 2015 |
| 80325 | LRFD Storm Sewer Burial Tables | Sections 550 and 1040 | Nov. 1, 2013 | April 1, 2015 |
| 80337 | Paved Shoulder Removal | Article 440.07 | April 1, 2014 | |
| 80254 | Pavement Patching | Article 701.17 | Jan. 1, 2010 | |
| 80352 | Pavement Striping - Symbols | Article 780.14 | Jan. 1, 2015 | |
| Chk Sht #19 | Pipe Underdrains | Section 601 and Articles 1003.01, 1003.04, 1004.05, 1040.06, and 1080.05 | Sept. 9, 1987 | Jan. 1, 2007 |
| 80343 | Precast Concrete Handhole | Articles 814.02, 814.03, and 1042.17 | Aug. 1, 2014 | |
| 80350 | Retroreflective Sheeting for Highway Signs | Article 1091.03 | Nov. 1, 2014 | |
| 80327 | Reinforcement Bars | Section 508 and Articles 421.04, 442.06, 1006.10 | Nov. 1, 2013 | |
| 80344 | Rigid Metal Conduit | Article 1088.01 | Aug. 1, 2014 | |
| 80354 | Sidewalk, Corner, or Crosswalk Closure | Article 1106.02 | Jan. 1, 2015 | April 1, 2015 |
| 80301 | Tracking the Use of Pesticides | Article 107.23 | Aug. 1, 2012 | |
| 80356 | Traffic Barrier Terminals Type 6 or 6B | Article 631.02 | Jan. 1, 2015 | |
| 80345 | Underpass Luminaire | Articles 821.06 and 1067.04 | Aug. 1, 2014 | April 1, 2015 |

| File Name | Special Provision Title | New Location | Effective | Revised |
|---|---|---|---|---|
| 80357 | Urban Half Road Closure with Mountable Median | Articles 701.18, 701.19, and 701.20 | Jan. 1, 2015 | July 1, 2015 |
| 80346 | Waterway Obstruction Warning Luminaire | Article 1067.07 | Aug. 1, 2014 | April 1, 2015 |

The following special provisions require additional information from the designer. The additional information needs to be included in a separate document attached to this check sheet. The Project Development and Implementation section will then include the information in the applicable special provision. The Special Provisions are:

- Bridge Demolition Debris
- Building Removal-Case I
- Building Removal-Case II
- Building Removal-Case III
- Building Removal-Case IV
- Completion Date
- Completion Date Plus Working Days
- DBE Participation
- Material Transfer Device
- Railroad Protective Liability Insurance
- Training Special Provisions
- Working Days

**ERRATA FOR THE 2016 STANDARD SPECIFICATIONS (BDE)**

Effective: April 1, 2016

Page 84 Article 204.02. In the seventh line of the first paragraph change "AASHTO T 99 (Method C)" to "Illinois Modified AASHTO T 99 (Method C)".

Page 90 Article 205.06. In the first sentence of the third paragraph change "AASHTO T 99 (Method C)" to "Illinois Modified AASHTO T 99 (Method C)".

Page 91 Article 205.06. In the first sentence of the fourth paragraph change "AASHTO T 99 (Method C)" to "Illinois Modified AASHTO T 99 (Method C)", and in the second sentence change "AASHTO T 224" to "Illinois Modified AASHTO T 99 (Annex A1)".

Page 91 Article 205.06. In the second line of the fifth paragraph change "AASHTO T 191" to "Illinois Modified AASHTO T 191".

Page 91 Article 205.06. In the sixth line of the eighth paragraph change "AASHTO T 99 (Method C)" to "Illinois Modified AASHTO T 99 (Method C)".

Page 148 Article 302.09. In the second sentence of the fifth paragraph change "AASHTO T 191" to "Illinois Modified AASHTO T 191", and in the third sentence change "AASHTO T 99" to "Illinois Modified AASHTO T 99".

Page 152 Article 310.09. In the second sentence of the second paragraph change "AASHTO T 191" to "Illinois Modified AASHTO T 191", and in the third sentence change "AASHTO T 99" to "Illinois Modified AASHTO T 99".

Page 155 Article 311.05(a). In the first sentence of the fifth paragraph change "AASHTO T 99 (Method C)" to "Illinois Modified AASHTO T 99 (Method C)", and in the second sentence change "AASHTO T 224" to "Illinois Modified AASHTO T 99 (Annex A1)".

Page 155 Article 311.05(a). In the second line of the sixth paragraph change "AASHTO T 191" to "Illinois Modified AASHTO T 191".

Page 163 Article 351.05(a). In the second sentence of the fifth paragraph change "AASHTO T 99 (Method C)" to "Illinois Modified AASHTO T 99 (Method C)", and in the third sentence change "AASHTO T 224" to "Illinois Modified AASHTO T 99 (Annex A1)".

Page 163 Article 351.05(a). In the second line of the sixth paragraph change "AASHTO T 191" to "Illinois Modified AASHTO T 191".

Page 169 Article 352.11. In the second sentence of the fourth paragraph change "AASHTO T 191" to "Illinois Modified AASHTO T 191", and in the third sentence change "AASHTO T 134 (Method B)" to "Illinois Modified AASHTO T 134 (Method B)".

Page 169 Article 352.12. In the first sentence of the first paragraph change "AASHTO T 22" to "Illinois Modified AASHTO T 22", and in the second sentence change "AASHTO T 134 (Method B)" to "Illinois Modified AASHTO T 134 (Method B)".

Page 196 Article 406.07(a). After the footnotes in Table 1 - Minimum Roller Requirements for HMA add the following:

"EQUIPMENT DEFINITION

$V_s$ - Vibratory roller, static mode, minimum 125 lb/in. (2.2 kg/mm) of roller width. Maximum speed = 3 mph (5 km/h) or 264 ft/min (80 m/min). If the vibratory roller does not eliminate roller marks, its use shall be discontinued and a tandem roller, adequately ballasted to remove roller marks, shall be used.

$V_D$ - Vibratory roller, dynamic mode, operated at a speed to produce not less than 10 impacts/ft (30 impacts/m).

P - Pneumatic-tired roller, max. speed 3 1/2 mph (5.5 km/h) or 308 ft/min (92 m/min). The pneumatic-tired roller shall have a minimum tire pressure of 80 psi (550 kPa) and shall be equipped with heat retention shields. The self-propelled pneumatic-tired roller shall develop a compression of not less than 300 lb (53 N) nor more than 500 lb (88 N) per in. (mm) of width of the tire tread in contact with the HMA surface.

$T_B$ - Tandem roller for breakdown rolling, 8 to 12 tons (7 to 11 metric tons), 250 to 400 lb/in. (44 to 70 N/mm) of roller width, max. speed = 3 1/2 mph (5.5 km/h) or 308 ft/min (92 m/min).

$T_F$ - Tandem roller for final rolling, 200 to 400 lb/in. (35 to 70 N/mm) of roller width with minimum roller width of 50 in. (1.25 m). Ballast shall be increased if roller marks are not eliminated. Ballast shall be decreased if the mat shoves or distorts.

3W- Three wheel roller, max. speed = 3 mph (5 km/h) or 264 ft/min (80 m/min), 300 to 400 lb/in. (53 to 70 N/mm) of roller width. The three-wheel roller shall weigh 10 to 12 tons (9 to 11 metric tons)."

Page 331 Article 505.04(p). Under Range of Clearance in the first table change "in. x $10^{-6}$" to "in. x $10^{-3}$".

Page 444 Article 542.03. In the Notes in Table IIIB add "CPP Corrugated Polypropylene (CPP) pipe with smooth interior".

Page 445 Article 542.03. In the fourth column in Table IIIB (metric) change the heading for Type 5 pipe from "CPE" to "CPP".

Page 445 Article 542.03. In the Notes in Table IIIB (metric) change "PE Polyethylene (PE) pipe with a smooth interior" to "CPP Corrugated Polypropylene (CPP) pipe with smooth interior".

Page 449 Article 542.04(f)(2). In the third line of the second paragraph change "AASHTO T 99 (Method C)" to "Illinois Modified AASHTO T 99 (Method C)".

Page 544 Article 639.03. In the first sentence of the first paragraph change "AASHTO Standard Specifications for Structural Supports for Highway Signs, Luminaires, Traffic Signals," to "AASHTO "LRFD Specifications for Structural Supports for Highway Signs, Luminaires, and Traffic Signals,"".

Page 546 Article 640.03. In the first sentence of the first paragraph change "AASHTO Standard Specifications for Structural Supports for Highway Signs, Luminaires, and Traffic Signals" to "AASHTO "LRFD Specifications for Structural Supports for Highway Signs, Luminaires, and Traffic Signals"".

Page 548 Article 641.03. In the first sentence of the first paragraph change "AASHTO Standard Specifications for Structural Supports for Highway Signs, Luminaire and Traffic Signals," to "AASHTO "LRFD Specifications for Structural Supports for Highway Signs, Luminaires, and Traffic Signals,"".

Page 621 Article 727.03. In the first sentence of the third paragraph change "AASHTO Standard Specifications for Structural Supports for Highway Signs, Luminaires and Traffic Signals" to "AASHTO "LRFD Specifications for Structural Supports for Highway Signs, Luminaires, and Traffic Signals"".

Page 629 Article 734.03(a). In the fourth line of the second paragraph change "AASHTO T 99 (Method C)" to "Illinois Modified AASHTO T 99 (Method C)".

Page 649 Article 801.02. In the first sentence of the first paragraph change "AASHTO's Standard Specifications for Structural Supports for Highway Signs, Luminaires, and Traffic Signals" to "AASHTO "LRFD Specifications for Structural Supports for Highway Signs, Luminaires, and Traffic Signals"".

Page 742 Article 1003.04(c). Under Gradation in the table change "(see Article 1003.02(c))" to "(see Article 1003.01(c))".

Page 755 Article 1004.03(b). Revise the third sentence of the first paragraph to read "For Class A (seal or cover coat), and other binder courses, the coarse aggregate shall be Class C quality or better.".

Page 809 Article 1020.04(e). In the third line of the first paragraph change "ITP SCC-3" to "ITP SCC-4".

Page 945 Article 1069.05. In the first sentence of the tenth paragraph change ""Standard Specifications for Structural Supports for Highway Signs, Luminaires, and Traffic Signals"" to "AASHTO "LRFD Specifications for Structural Supports for Highway Signs, Luminaires, and Traffic Signals"".

Page 961 Article 1070.04(b)(1). In the third sentence of the first paragraph change ""Standard Specifications of Structural Supports for Highway Signs, Luminaires and Traffic Signals" published by AASHTO" to "AASHTO "LRFD Specifications for Structural Supports for Highway Signs, Luminaires, and Traffic Signals"".

Page 989 Article 1077.01. In the second sentence of the first paragraph change "Standard Specifications for Structural Supports for Highway Signs, Luminaires, and Traffic Signals, as published by AASHTO" to "AASHTO "LRFD Specifications for Structural Supports for Highway Signs, Luminaires, and Traffic Signals"".

Page 1121 Article 1103.13(a). In the first line of the first paragraph change "Bridge Deck Approach Slabs." to "Bridge Deck and Approach Slabs.".

80364

**WORKING DAYS (BDE)**

Effective: January 1, 2002

The Contractor shall complete the work within 20 working days.

80071

State of Illinois
Department of Transportation
Bureau of Local Roads and Streets

# SPECIAL PROVISION
# FOR
# INSURANCE

Effective: February 1, 2007
Revised: August 1, 2007

All references to Sections or Articles in this specification shall be construed to mean specific Section or Article of the Standard Specifications for Road and Bridge Construction, adopted by the Department of Transportation.

The Contractor shall name the following entities as additional insured under the Contractor's general liability insurance policy in accordance with Article 107.27:

Tazewell County

The entities listed above and their officers, employees, and agents shall be indemnified and held harmless in accordance with Article 107.26.

State of Illinois
Department of Transportation
Bureau of Local Roads and Streets

# SPECIAL PROVISION
# FOR
# COARSE AGGREGATE FOR BITUMINOUS SURFACE TREATMENT

Effective: January 1, 2002
Revised: January 1, 2007

All references to Sections or Articles in this special provision shall be construed to mean specific Section or Article of the Standard Specifications for Road and Bridge Construction, adopted by the Department of Transportation.

This work shall be performed according to Section 403 and the following:

1004.01 Materials. Add the following to the gradation tables in subparagraph (c) of Article 1004.01:

| Coarse Aggregate Gradations | | | | | |
|---|---|---|---|---|---|
| Sieve Size<br>Percent Passing | | | | | |
| Grad No. | 12.5 mm ½ in. | 9.5 mm 3/8 in. | 4.75 mm #4 | 2.36 mm #8 | 1.18 mm #16 |
| CA 20 | 100 | 92 ± 8 | 20 ± 10 | 5 ± 5 | 3 ±3 |

1004.03 Coarse Aggregate for Hot-Mix Asphalt (HMA). Revise the first line of the table in subparagraph (c) of Article 1004.03 to read:

| Use | Size/Application | Gradation No. |
|---|---|---|
| Class A-1, 2, & 3 | 3/8 in. (10 mm) Seal | CA 20 [3/] |

Add the following note to the end of subparagraph (c) of Article 1004.03:

"3/ CA16 or CM16 produced under the AGCS Program with a master band may be used if it meets the gradation requirements specified for CA20 in Article 1004.01(c)"

Amend the Aggregate Gradation Control System (AGCS) Policy Memorandum to add the following:

"CA 20 shall be produced under the AGCS program. However, the gradation bands may not be adjusted."

# TAZEWELL COUNTY
# 16-00000-05-GM

1. SpringLake Rd. (CH 21) - 4.09 miles

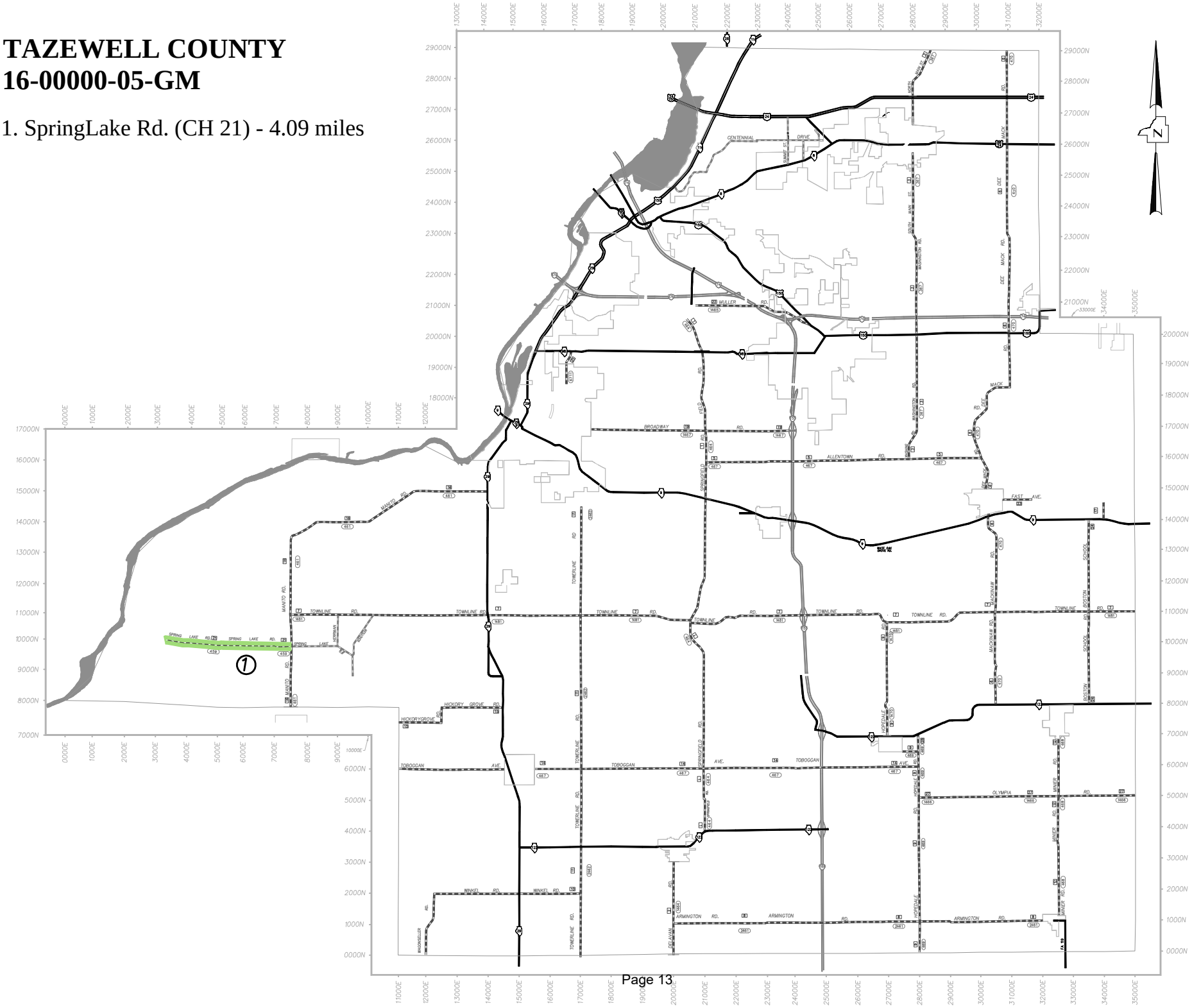

TAZEWELL COUNTY
Sec. 16-00000-05-GM

## SUMMARY OF QUANTITIES

| Pay Item | Quantity | Unit |
|---|---|---|
| CAPE SEAL | 53394 | SQ YD |
| INCIDENTAL CAPE SEAL | 3565 | SQ YD |
| SHORT-TERM PAVEMENT MARKING(PAINT) | 6492 | FOOT |
| RAISED REFLECTIVE PAVEMENT MARKER REMOVAL | 271 | EACH |
| RAISED REFLECTIVE PAVEMENT MARKER | 271 | EACH |
| TRAF CONT & PROT SPL | 1 | L SUM |
| MOBILIZATION | 1 | L SUM |

SpringLake Rd. (CH 21) - Manito Rd. (CH 16) Sta. 0+00 west to Spring Lake Sta. 216+15

| | | |
|---|---|---|
| Road Length: | 21,615 | Feet |
| Road Width: | 22 | Feet |
| Paved Shoulder Length: Sta. 203+60 to 216+15 | 1255 | **Feet** |
| Paved Shoulder Width: | 2 | **Feet** |

**CAPE SEAL:**

| | | |
|---|---|---|
| Roadway & Shoulders: | **53,394** | **SY** |

**INCIDENTAL CAPE SEAL:**

| | | |
|---|---|---|
| Sideroads, Drives, Etc.: | **3565** | **SY** |

**SHORT TERM PAVT MKING PAINT:**

| | | |
|---|---|---|
| Yellow 3 Lifts 4' / 40': | **6492** | **FOOT** |

| | | |
|---|---|---|
| **RAISED REFLECTIVE PAVEMENT MARKERS REMOVAL:** | **271** | **EACH** |

| | | |
|---|---|---|
| **RAISED REFLECTIVE PAVEMENT MARKERS:** | **271** | **EACH** |

1 marker / 80'

**CAPE SEAL TREATMENT**

THE MATERIALS FOR THE A-1 SURFACE SHALL BE CA-20
THE MICRO-SURFACING APPLICATION SHALL BE DOUBLE PASS, TYPE II, 24 LB/SQYD
THE AGGREGATE FOR THE MICROSURFACING SHALL MEET THE FRICTION AGGREGATE REQUIREMENTS FOR THE MIXTURE C IN ARTICLE 1004.03 (a) WITH A MINIMUM OF 75% STEEL SLAG SAND TYPE II

**INCIDENTAL CAPE SEAL TREATMENT**

THE MATERIALS FOR THE A-1 SURFACE SHALL BE CA-20
THE MICRO-SURFACING APPLICATION SHALL BE SINGLE PASS, TYPE II, 24 LB/SQYD
THE AGGREGATE FOR THE MICROSURFACING SHALL MEET THE FRICTION AGGREGATE REQUIREMENTS FOR THE MIXTURE C IN ARTICLE 1004.03 (a) WITH A MINIMUM OF 75% STEEL SLAG SAND TYPE II

# TYPICAL CROSS SECTION
# C.H. 21 - SPRING LAKE RD.

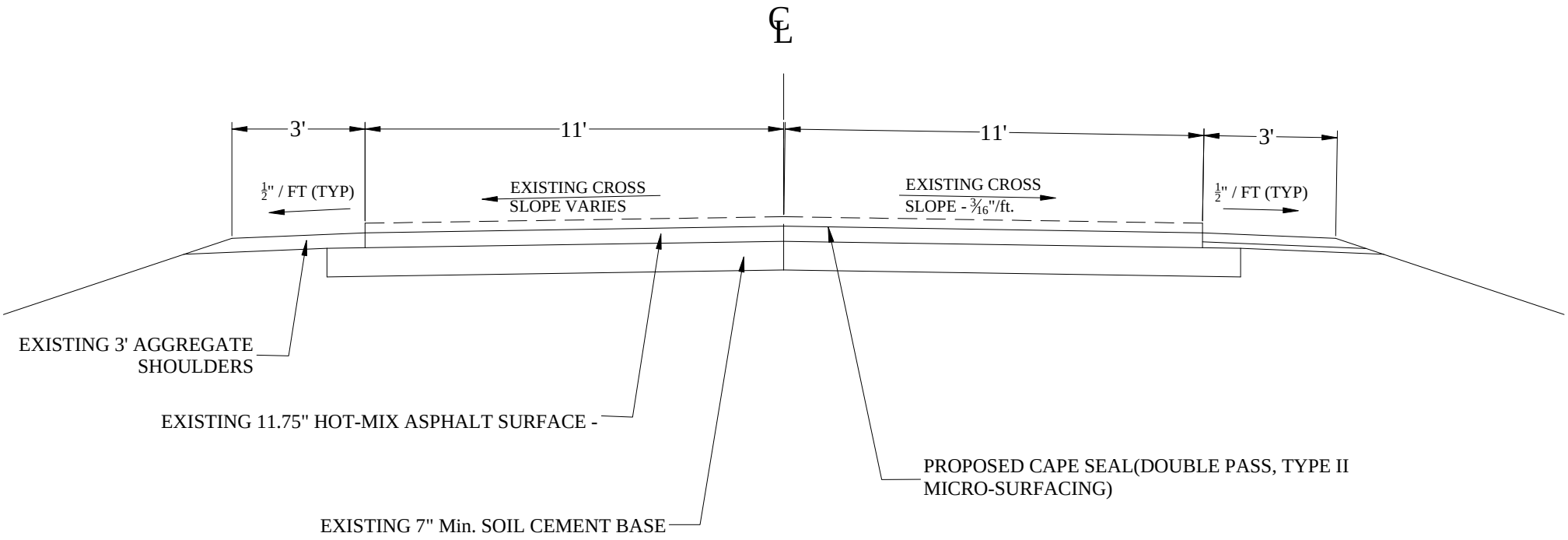


NOTE: HOT-MIX ASPHALT SHOULDER LOCATION
Sta. 203+60 to 216+15 - 2' LT & RT
CAPE SEAL WITH ROADWAY

NOTE: CAPE SEAL TREATMENT
THE MATERIALS FOR THE A-1 SURFACE SHALL BE CA-20.
THE MICRO-SURFACING APPLICATION SHALL BE DOUBLE PASS, TYPE II, 20 LB./SQ. YD. PER PASS
THE AGGREGATE FOR THE MICROSURFACING SHALL MEET THE FRICTION AGGREGATE REQUIREMENTS FOR THE MIXTURE C IN ARTICLE 1004.03 (a) WITH A MINIMUM OF 75% STEEL SLAG SAND TYPE II

Section: 16-00000-05-GM
Item: 1
Route: CH 21 - SPRING LAKE RD.
Location: Manito Rd. (CH 16) to Spring Lake

# STANDARD FOR INCIDENTAL CAPE SEAL AT SIDEROADS, ENTRANCES AND MAILBOXES

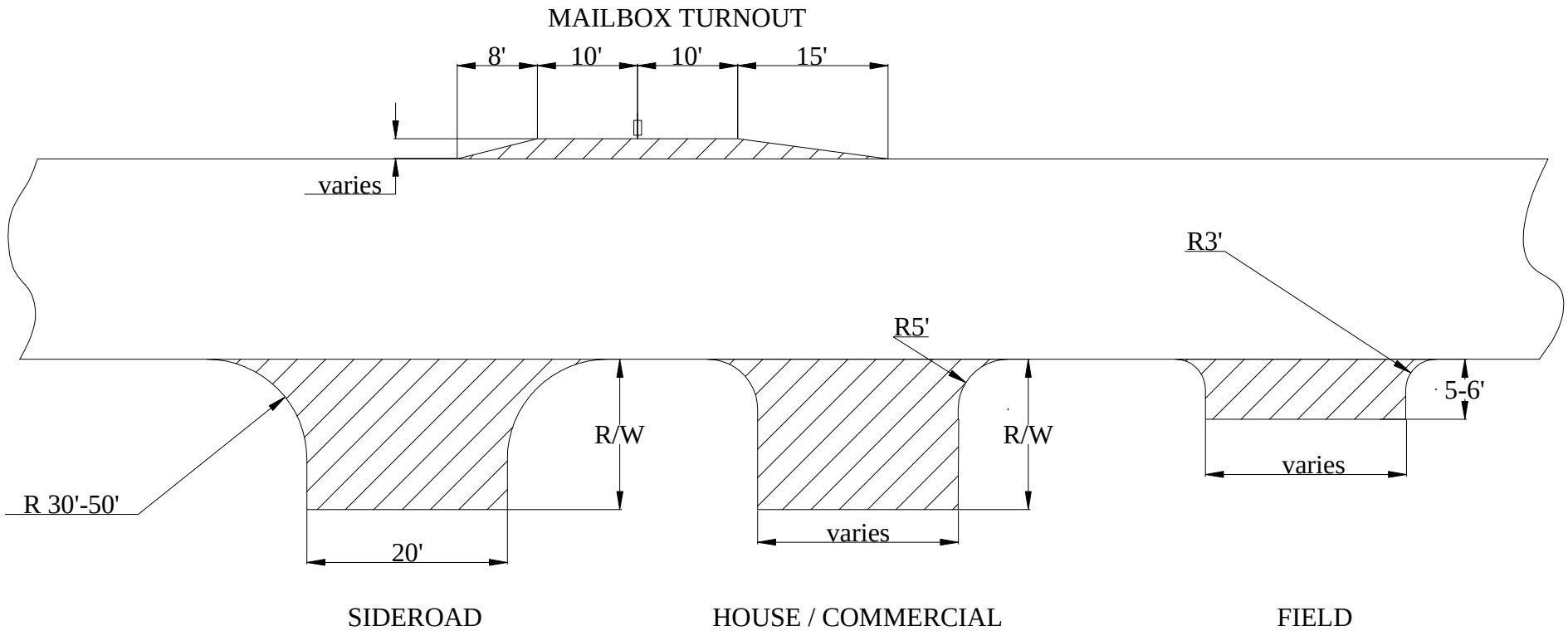


Notes: 1. Dimensions are approximate and may be adjusted in the field by the Engineer

2. INCIDENTAL CAPE SEAL TREATMENT:
   THE MATERIALS FOR THE A-1 SURFACE SHALL BE CA-20.
   THE MICRO-SURFACING APPLICATION SHALL BE SINGLE PASS, TYPE II, 20 LB./SQ. YD. PER PASS
   THE AGGREGATE FOR THE MICROSURFACING SHALL MEET THE FRICTION AGGREGATE REQUIREMENTS FOR THE MIXTURE C IN ARTICLE 1004.03 (a) WITH A MINIMUM OF 75% STEEL SLAG SAND TYPE II

For any operation that encroaches in the area between the centerline and a line 24 (600) outside the edge of the pavement for a period of less than 15 minutes.

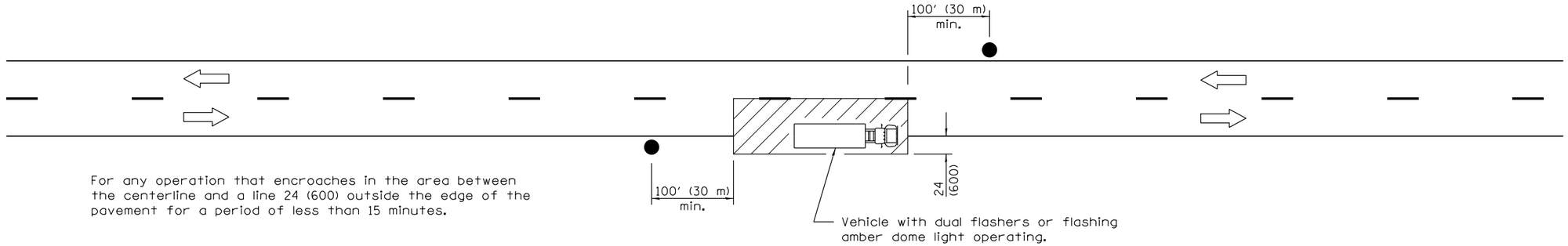


For any operation that is more than 24 (600) outside the edge of the pavement for a period of less than 60 minutes.

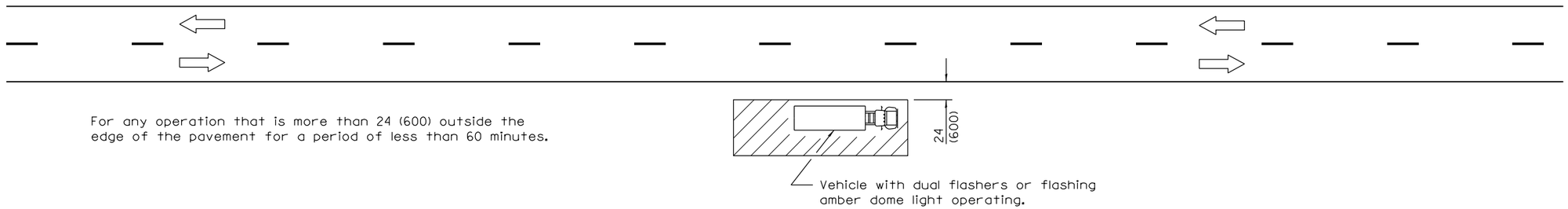


For any operation that encroaches in the area between the centerline and a line 24 (600) outside the edge of the pavement for a period in excess of 15 minutes but less than 60 minutes.

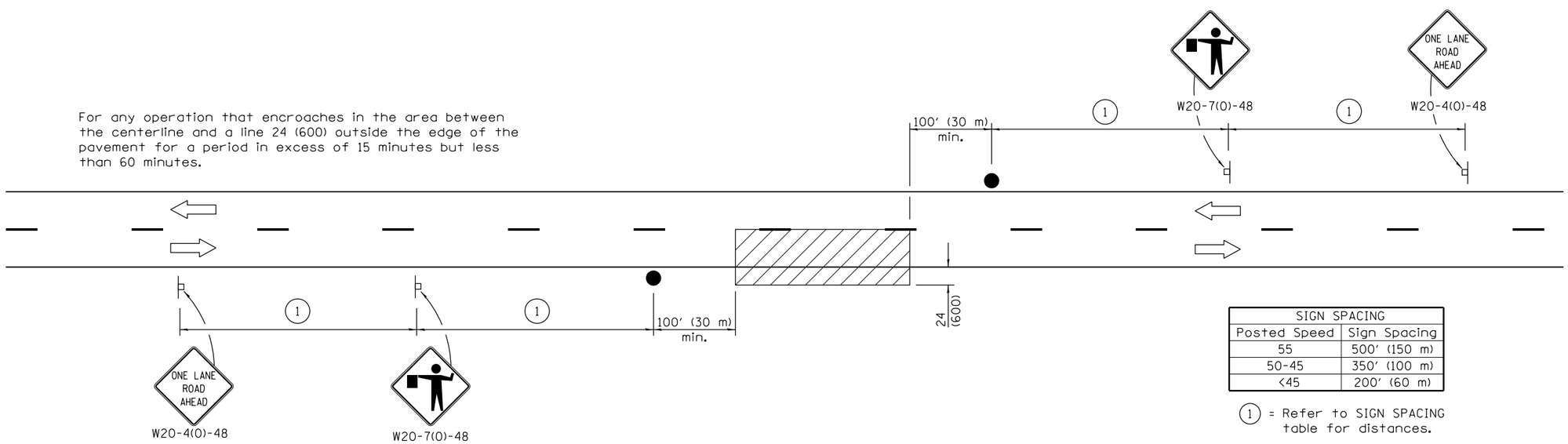


| SIGN SPACING | |
|---|---|
| Posted Speed | Sign Spacing |
| 55 | 500' (150 m) |
| 50-45 | 350' (100 m) |
| <45 | 200' (60 m) |

(1) = Refer to SIGN SPACING table for distances.

All dimensions are in inches (millimeters) unless otherwise shown.

## TYPICAL APPLICATIONS

Marking patches
Field survey
String line
Utility operations
Cleaning up debris on pavement

## SYMBOLS

Work area

Sign on portable or permanent support

Flagger with traffic control sign

| DATE | REVISIONS |
|---|---|
| 1-1-11 | Revised flagger sign. |
| | |
| | |
| 1-1-09 | Switched units to |
| | English (metric). |
| | |

# LANE CLOSURE, 2L, 2W, SHORT TIME OPERATIONS

**STANDARD 701301–04**

Illinois Department of Transportation

APPROVED January 1, 2011
ENGINEER OF SAFETY ENGINEERING

APPROVED January 1, 2011
ENGINEER OF DESIGN AND ENVIRONMENT

ISSUED 1-1-97

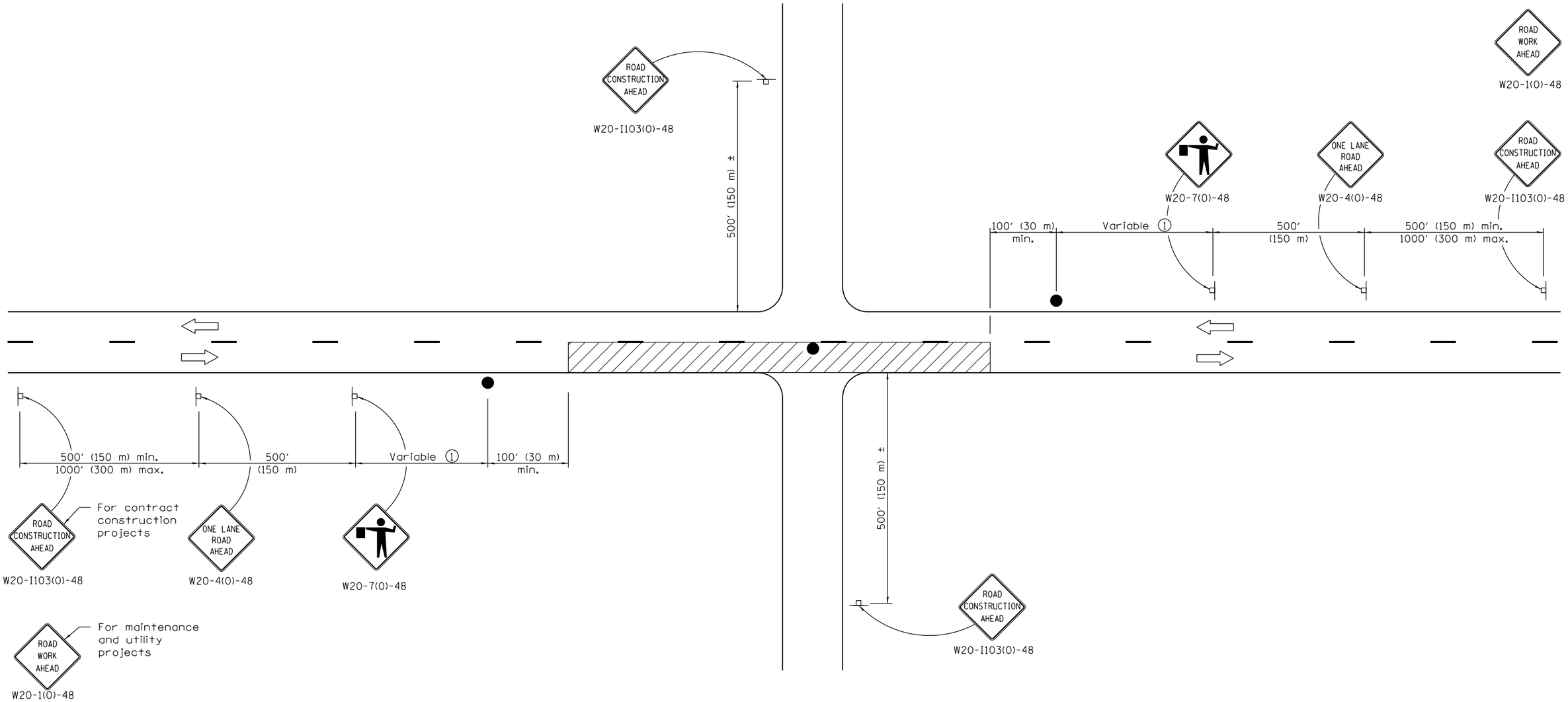


## TYPICAL APPLICATIONS

Bituminous resurfacing
Milling operations
Utility operations
Shoulder operations

① Minimum distance is 200′ (60 m). Maximum distance to be determined by the Engineer but should not exceed ½ the length required for one normal working day's operation or 2 miles (3200 m), whichever is less.

## SYMBOLS

Work area

Sign on portable or permanent support

Flagger with traffic control sign

## GENERAL NOTES

This Standard is used where at any time, any vehicle, equipment, workers or their activities require an intermittent or continuous moving operation on the pavement where the average speed of movement is greater than 1 mph (2 km/h) and less than 4 mph (6 km/h).

When the operation does not exceed 60 minutes, traffic control may be according to Standard 701301.

All dimensions are in inches (millimeters) unless otherwise shown.

Illinois Department of Transportation

APPROVED January 1, 2011
ENGINEER OF SAFETY ENGINEERING

APPROVED January 1, 2011
ENGINEER OF DESIGN AND ENVIRONMENT

ISSUED 1-1-97

| DATE | REVISIONS |
|---|---|
| 1-1-11 | Revised flagger sign. |
| | |
| | |
| 1-1-09 | Switched units to |
| | English (metric). |
| | Corrected sign No.'s. |

# LANE CLOSURE, 2L, 2W, SLOW MOVING OPERATIONS DAY ONLY, FOR SPEEDS ≥ 45 MPH

**STANDARD 701306–03**

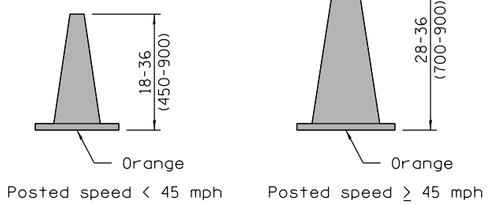


**CONE FOR DAYTIME**

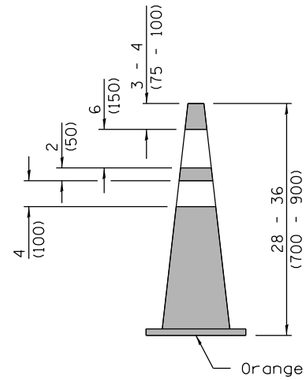


**REFLECTORIZED CONE FOR NIGHTTIME**

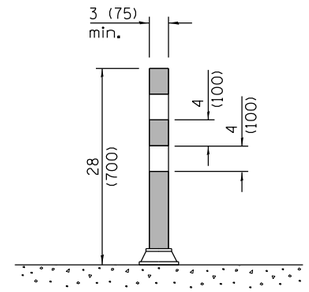


**FLEXIBLE DELINEATOR**

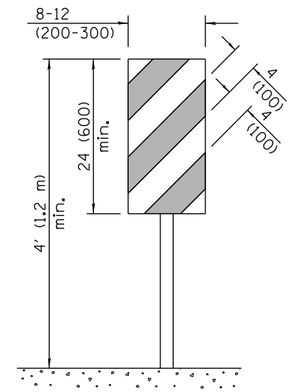


**VERTICAL PANEL**
POST MOUNTED

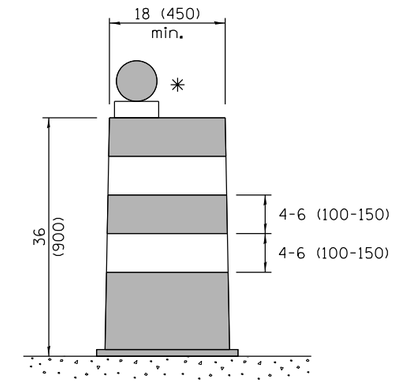


**DRUM**

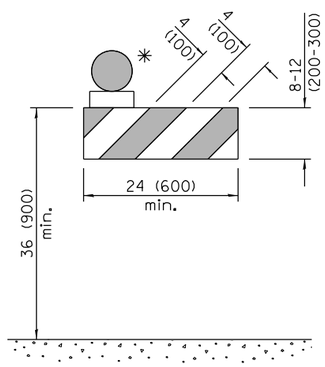


**TYPE I BARRICADE**

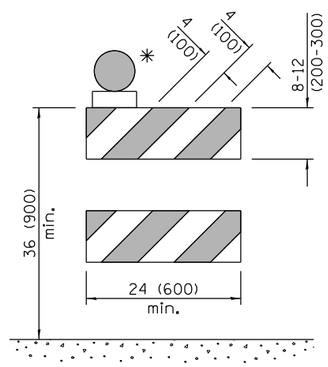


**TYPE II BARRICADE**

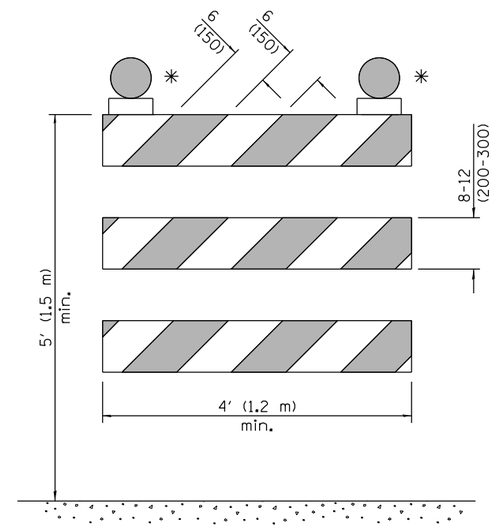


**TYPE III BARRICADE**

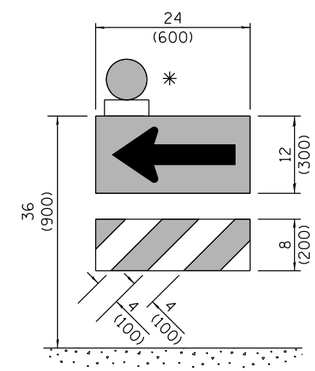


**DIRECTION INDICATOR BARRICADE**

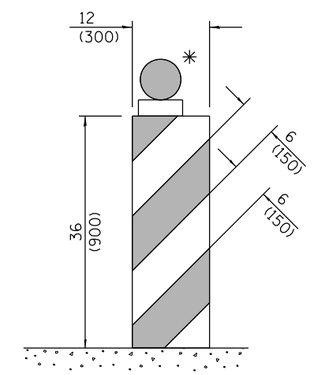


**VERTICAL BARRICADE**

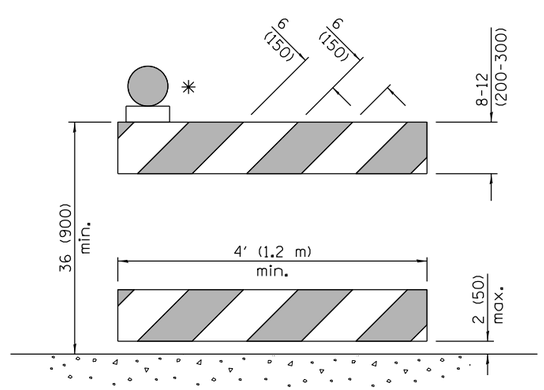


**DETECTABLE PEDESTRIAN CHANNELIZING BARRICADE**

✳ Warning lights (if required)

## GENERAL NOTES

All heights shown shall be measured above the pavement surface.

All dimensions are in inches (millimeters) unless otherwise shown.

Illinois Department of Transportation

APPROVED April 1, 2016
ENGINEER OF OPERATIONS
APPROVED April 1, 2016
ENGINEER OF DESIGN AND ENVIRONMENT

ISSUED 1-1-97

| DATE | REVISIONS |
|---|---|
| 4-1-16 | Add dim's to barricades. Rev. |
| | note for post mnt. signs. |
| | Rev. cone dtls. Add W12-I103. |
| 1-1-15 | Revised two sign numbers on |
| | sheet 2. Added note reg. |
| | PHOTO ENFORCED plaque. |

# TRAFFIC CONTROL DEVICES

(Sheet 1 of 3)

**STANDARD 701901-05**

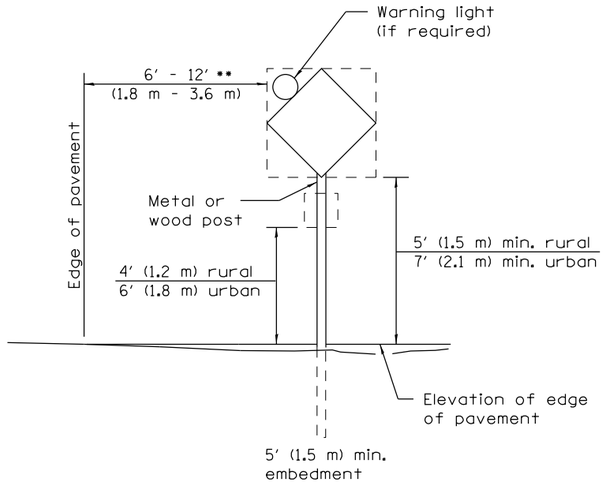


## POST MOUNTED SIGNS

•• When curb or paved shoulder are present this dimension shall be 24 (600) to the face of curb or 6′ (1.8 m) to the outside edge of the paved shoulder.

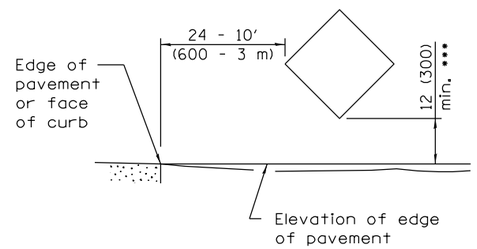


## SIGNS ON TEMPORARY SUPPORTS

••• When work operations exceed four days, this dimension shall be 5′ (1.5 m) min. If located behind other devices, the height shall be sufficient to be seen completely above the devices.

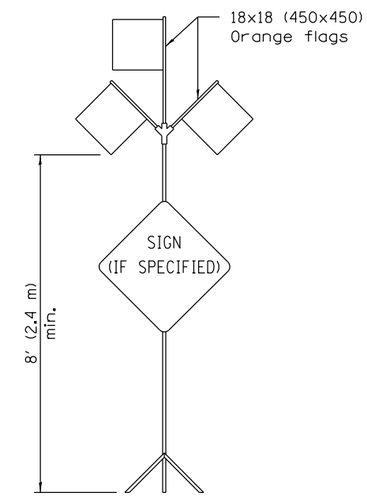


## HIGH LEVEL WARNING DEVICE

G20-I104(0)-6036 G20-I105(0)-6024

This signing is required for all projects 2 miles (3200 m) or more in length.

ROAD CONSTRUCTION NEXT X MILES sign shall be placed 500′ (150 m) in advance of project limits.

END CONSTRUCTION sign shall be erected at the end of the job unless another job is within 2 miles (3200 m).

Dual sign displays shall be utilized on multi-lane highways.

## WORK LIMIT SIGNING

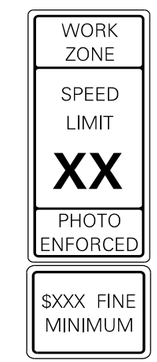


W21-I115(0)-3618

R2-1-3648

R10-I108p-3618 ••••

R2-I106p-3618

Sign assembly as shown on Standards or as allowed by District Operations.

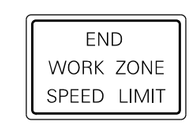


G20-I103(0)-6036

This sign shall be used when the above sign assembly is used.

## HIGHWAY CONSTRUCTION SPEED ZONE SIGNS

•••• R10-I108p shall only be used along roadways under the juristiction of the State.

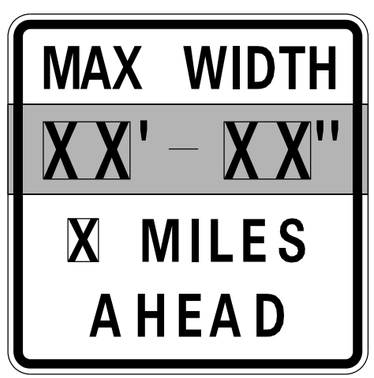


W12-I103-4848

## WIDTH RESTRICTION SIGN

XX′-XX″ width and X miles are variable.

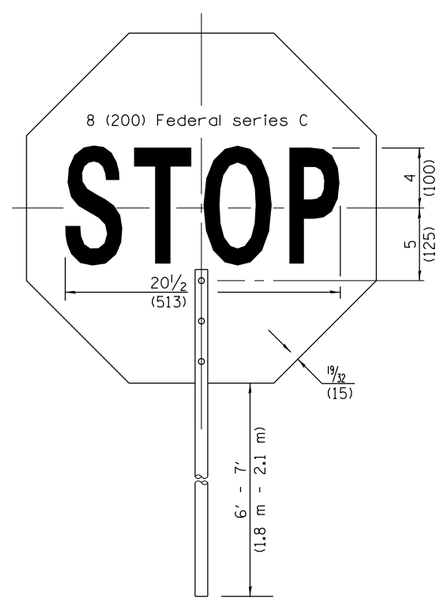


FRONT SIDE

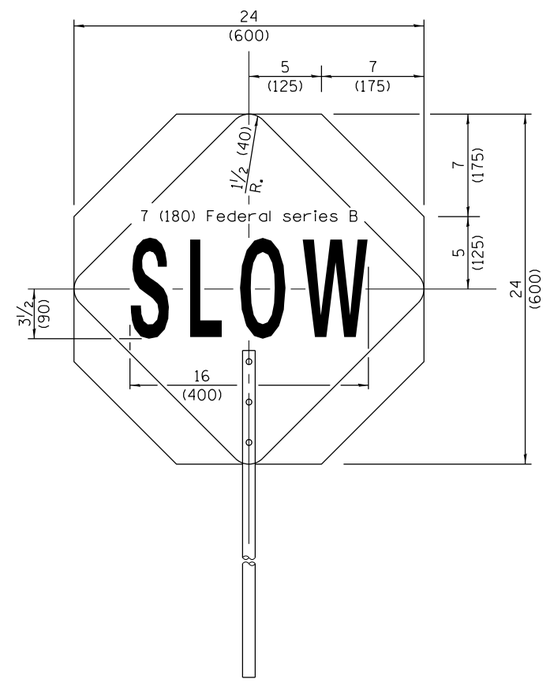


REVERSE SIDE

## FLAGGER TRAFFIC CONTROL SIGN

Illinois Department of Transportation

APPROVED April 1, 2016
ENGINEER OF OPERATIONS

APPROVED April 1, 2016
ENGINEER OF DESIGN AND ENVIRONMENT

ISSUED 1-1-97

# TRAFFIC CONTROL DEVICES

(Sheet 2 of 3)

STANDARD 701901–05

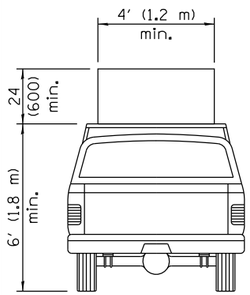


**TYPE A ROOF MOUNTED**

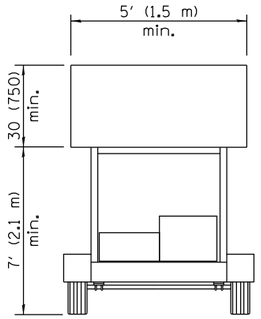


**TYPE B ROOF OR TRAILER MOUNTED**

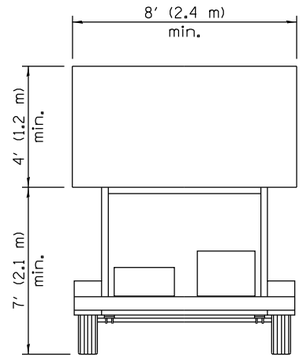


**TYPE C TRAILER MOUNTED**

**ARROW BOARDS**

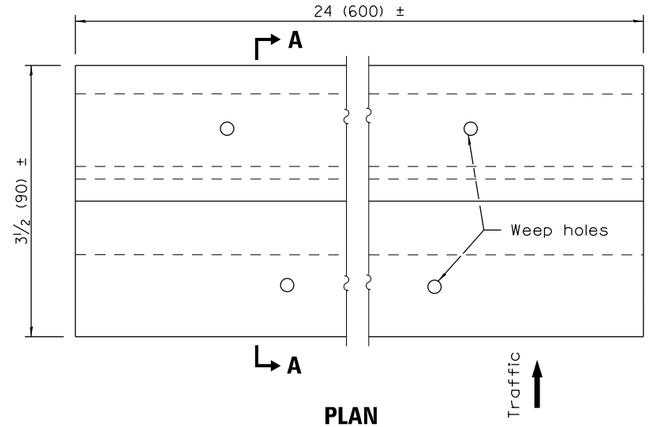


**PLAN**

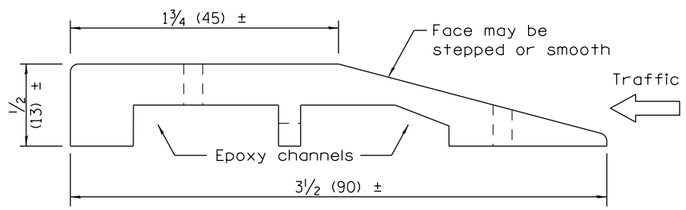


**SECTION A–A**

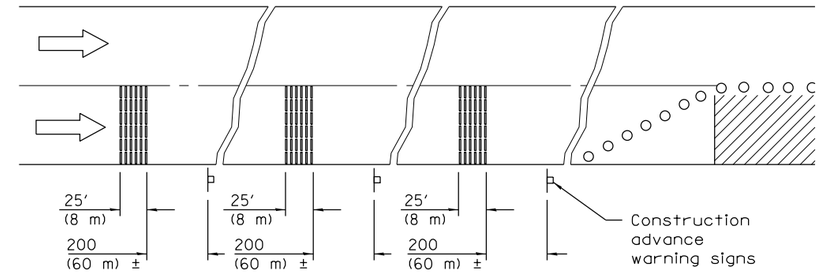


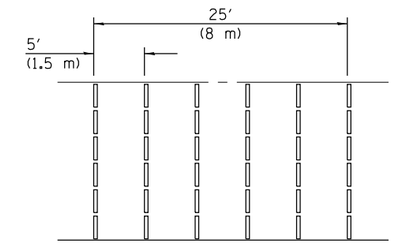


**TYPICAL INSTALLATION**

**TEMPORARY RUMBLE STRIPS**

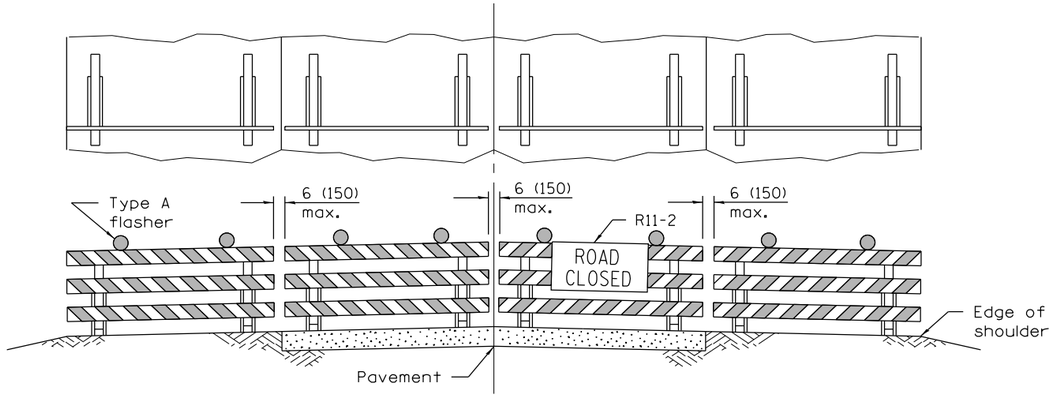


ROAD CLOSED TO ALL TRAFFIC

Reflectorized striping may be omitted on the back side of the barricades. If a Type III barricade with an attached sign panel which meets NCHRP 350 is not available, the sign may be mounted on an NCHRP 350 temporary sign support directly in front of the barricade.

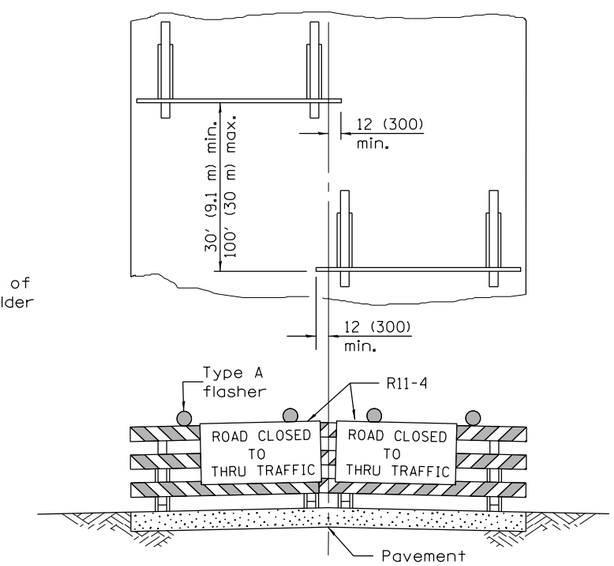


ROAD CLOSED TO THRU TRAFFIC

Reflectorized striping shall appear on both sides of the barricades. If a Type III barricade with an attached sign panel which meets NCHRP 350 is not available, the signs may be mounted on NCHRP 350 temporary sign supports directly in front of the barricade.

**TYPICAL APPLICATIONS OF TYPE III BARRICADES CLOSING A ROAD**

Illinois Department of Transportation

APPROVED April 1, 2016
ENGINEER OF OPERATIONS
APPROVED April 1, 2016
ENGINEER OF DESIGN AND ENVIRONMENT

ISSUED 1-1-97

# TRAFFIC CONTROL DEVICES

(Sheet 3 of 3)

**STANDARD 701901–05**

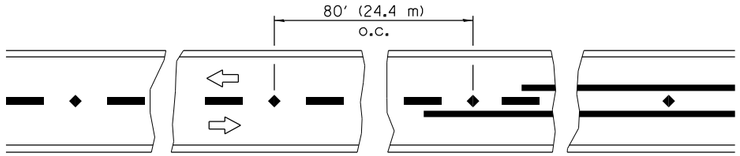


Reduce to 40′ (12.2 m) o.c. on curves with posted or advisory speeds of 45 mph (70 km/h) or less.

## TWO–LANE /TWO–WAY

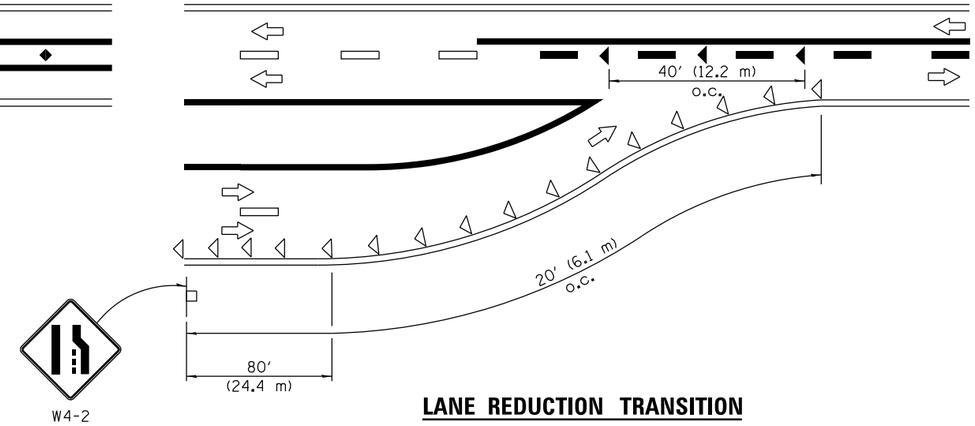


## LANE REDUCTION TRANSITION

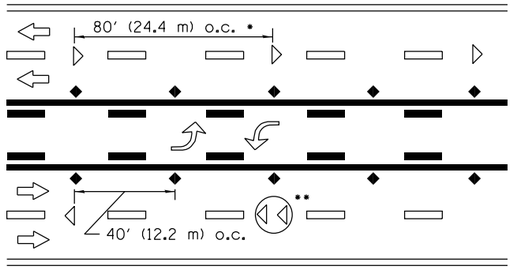


•,•• See MULTI LANE DIVIDED detail for lane marker notes.

## TWO–WAY LEFT TURN

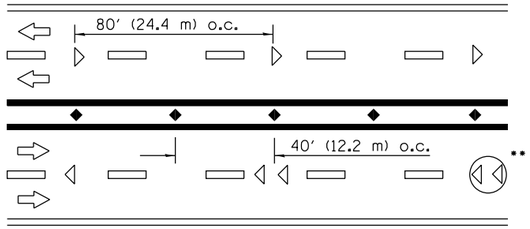


•,•• See MULTI LANE DIVIDED detail for lane marker notes.

## MULTI–LANE UNDIVIDED

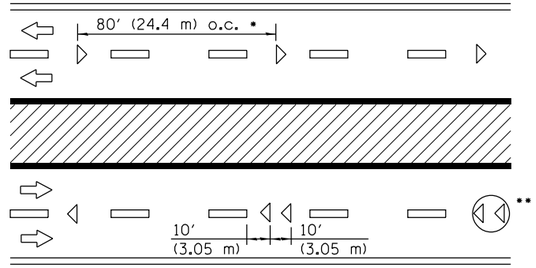


• Reduce to 40′ (12.2 m) o.c. on curves where advisory speeds are 10 mph (15 km/h) lower than posted speeds.

•• Where double lane line markers are specified, they shall be spaced as shown.

## MULTI–LANE DIVIDED

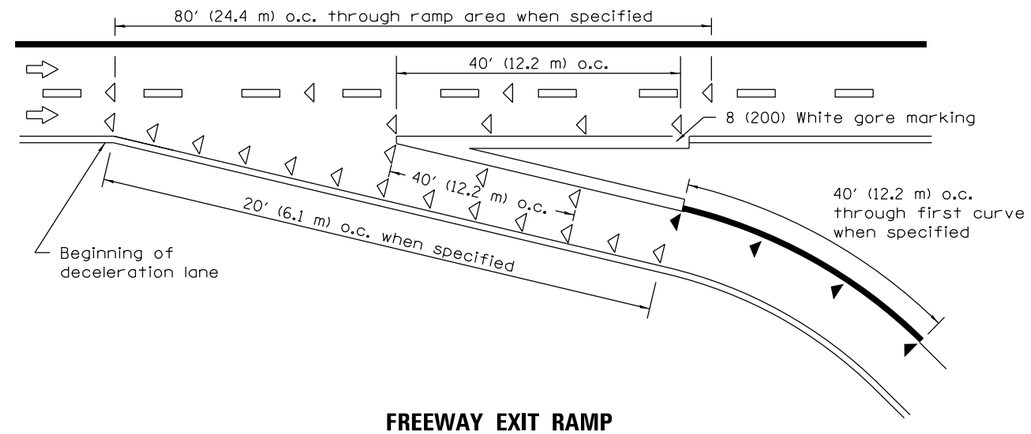


## FREEWAY EXIT RAMP

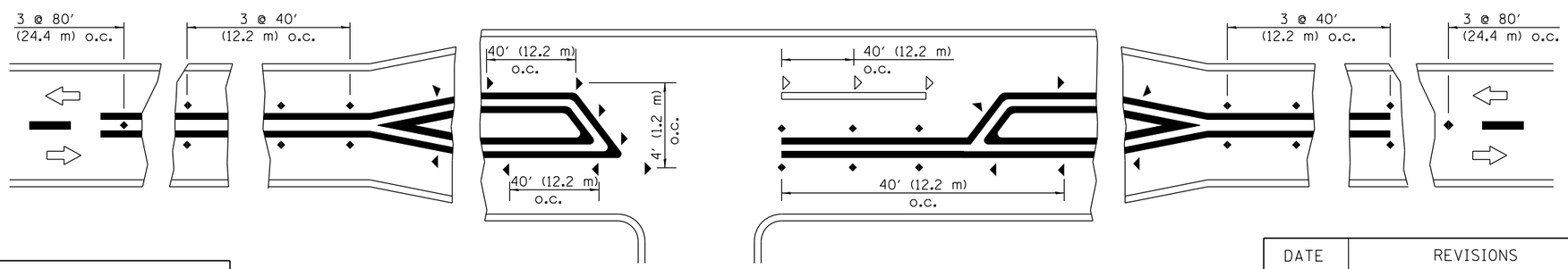


## RURAL LEFT TURN

## SYMBOLS

- Yellow stripe
- White stripe
- One-way amber marker
- One-way crystal marker
- Two-way amber marker

All dimensions are in inches (millimeters) unless otherwise shown.

Illinois Department of Transportation

APPROVED April 1, 2016
ENGINEER OF OPERATIONS

APPROVED April 1, 2016
ENGINEER OF DESIGN AND ENVIRONMENT

ISSUED 1-1-97

| DATE | REVISIONS |
|---|---|
| 4-1-16 | Revised LANE ENDS sign |
| | W4-2 to agree with current |
| | MUTCD. |
| 1-1-09 | Switched units to |
| | English (metric). |
| | |

# TYPICAL APPLICATIONS RAISED REFLECTIVE PAVEMENT MARKERS

STANDARD 781001–04

# Tazewell County Prevailing Wage for July 2015

**(See explanation of column headings at bottom of wages)**

| Trade Name | RG | TYP | C | Base | FRMAN | M-F>8 | OSA | OSH | H/W | Pensn | Vac | Trng |
|---|---|---|---|---|---|---|---|---|---|---|---|---|
| ASBESTOS ABT-GEN | NW | BLD | | 26.700 | 28.200 | 1.5 | 1.5 | 2.0 | 7.700 | 16.21 | 0.000 | 0.800 |
| ASBESTOS ABT-GEN | NW | HWY | | 29.910 | 31.410 | 1.5 | 1.5 | 2.0 | 7.700 | 17.47 | 0.000 | 0.800 |
| ASBESTOS ABT-GEN | SE | BLD | | 27.150 | 27.900 | 1.5 | 1.5 | 2.0 | 8.500 | 13.25 | 0.000 | 0.800 |
| ASBESTOS ABT-MEC | | BLD | | 32.510 | 35.010 | 1.5 | 1.5 | 2.0 | 11.47 | 10.96 | 0.000 | 0.720 |
| BOILERMAKER | | BLD | | 38.000 | 41.000 | 2.0 | 2.0 | 2.0 | 7.070 | 15.99 | 0.000 | 0.400 |
| BRICK MASON | | BLD | | 32.380 | 33.880 | 1.5 | 1.5 | 2.0 | 8.600 | 9.870 | 0.000 | 0.590 |
| CARPENTER | | BLD | | 30.880 | 33.130 | 1.5 | 1.5 | 2.0 | 8.000 | 15.71 | 0.000 | 0.520 |
| CARPENTER | | HWY | | 32.700 | 34.950 | 1.5 | 1.5 | 2.0 | 8.000 | 15.81 | 0.000 | 0.520 |
| CEMENT MASON | | BLD | | 28.050 | 29.800 | 1.5 | 1.5 | 2.0 | 7.500 | 15.65 | 0.000 | 0.500 |
| CEMENT MASON | | HWY | | 29.280 | 30.780 | 1.5 | 1.5 | 2.0 | 7.500 | 16.02 | 0.000 | 0.500 |
| CERAMIC TILE FNSHER | | BLD | | 29.890 | 0.000 | 1.5 | 1.5 | 2.0 | 8.600 | 10.05 | 0.000 | 0.580 |
| ELECTRIC PWR EQMT OP | | ALL | | 38.300 | 45.290 | 1.5 | 1.5 | 2.0 | 6.150 | 10.73 | 0.000 | 0.380 |
| ELECTRIC PWR GRNDMAN | | ALL | | 26.280 | 45.290 | 1.5 | 1.5 | 2.0 | 5.790 | 7.360 | 0.000 | 0.260 |
| ELECTRIC PWR LINEMAN | | ALL | | 42.540 | 45.290 | 1.5 | 1.5 | 2.0 | 6.280 | 11.92 | 0.000 | 0.430 |
| ELECTRIC PWR TRK DRV | | ALL | | 27.560 | 45.290 | 1.5 | 1.5 | 2.0 | 5.830 | 7.720 | 0.000 | 0.280 |
| ELECTRICIAN | | ALL | | 34.820 | 37.320 | 1.5 | 1.5 | 2.0 | 6.500 | 11.68 | 0.000 | 0.800 |
| ELECTRICIAN | | BLD | | 34.820 | 37.320 | 1.5 | 1.5 | 2.0 | 6.100 | 11.43 | 0.000 | 0.400 |
| ELECTRONIC SYS TECH | | BLD | | 28.250 | 30.250 | 1.5 | 1.5 | 2.0 | 6.350 | 10.54 | 0.000 | 0.400 |
| ELEVATOR CONSTRUCTOR | | BLD | | 41.690 | 46.900 | 2.0 | 2.0 | 2.0 | 13.57 | 14.21 | 3.340 | 0.600 |
| GLAZIER | | BLD | | 31.870 | 33.870 | 1.5 | 1.5 | 1.5 | 10.25 | 7.700 | 0.000 | 1.250 |
| HT/FROST INSULATOR | | BLD | | 43.350 | 45.850 | 1.5 | 1.5 | 2.0 | 11.47 | 12.36 | 0.000 | 0.720 |
| IRON WORKER | | BLD | | 32.190 | 34.090 | 0.0 | 0.0 | 0.0 | 9.490 | 13.91 | 0.000 | 0.000 |
| IRON WORKER | | HWY | | 35.980 | 37.980 | 0.0 | 0.0 | 0.0 | 9.490 | 13.91 | 0.000 | 0.000 |
| LABORER | NW | BLD | | 26.100 | 27.600 | 1.5 | 1.5 | 2.0 | 7.700 | 16.21 | 0.000 | 0.800 |
| LABORER | NW | HWY | | 29.160 | 30.660 | 1.5 | 1.5 | 2.0 | 7.700 | 17.47 | 0.000 | 0.800 |
| LABORER | SE | BLD | | 27.150 | 27.900 | 1.5 | 1.5 | 2.0 | 8.500 | 13.25 | 0.000 | 0.800 |
| LABORER | SE | HWY | | 30.490 | 31.990 | 1.5 | 1.5 | 2.0 | 8.500 | 15.30 | 0.000 | 0.800 |
| LATHER | | BLD | | 30.880 | 33.130 | 1.5 | 1.5 | 2.0 | 8.000 | 15.71 | 0.000 | 0.520 |
| MACHINERY MOVER | | HWY | | 35.980 | 37.980 | 0.0 | 0.0 | 0.0 | 9.490 | 13.91 | 0.000 | 0.000 |
| MACHINIST | | BLD | | 45.350 | 47.850 | 1.5 | 1.5 | 2.0 | 7.260 | 8.950 | 1.850 | 0.000 |
| MARBLE FINISHERS | | BLD | | 29.890 | 0.000 | 1.5 | 1.5 | 2.0 | 8.600 | 10.05 | 0.000 | 0.580 |
| MARBLE MASON | | BLD | | 31.650 | 32.900 | 1.5 | 1.5 | 2.0 | 8.600 | 10.05 | 0.000 | 0.580 |
| MILLWRIGHT | | BLD | | 31.060 | 33.310 | 1.5 | 1.5 | 2.0 | 8.000 | 15.87 | 0.000 | 0.520 |
| MILLWRIGHT | | HWY | | 33.060 | 35.310 | 1.5 | 1.5 | 2.0 | 8.000 | 15.95 | 0.000 | 0.520 |
| OPERATING ENGINEER | | BLD | 1 | 37.050 | 40.050 | 1.5 | 1.5 | 2.0 | 7.000 | 17.48 | 0.000 | 3.000 |
| OPERATING ENGINEER | | BLD | 2 | 34.450 | 40.050 | 1.5 | 1.5 | 2.0 | 7.000 | 17.48 | 0.000 | 3.000 |
| OPERATING ENGINEER | | BLD | 3 | 30.160 | 40.050 | 1.5 | 1.5 | 2.0 | 7.000 | 17.48 | 0.000 | 3.000 |
| OPERATING ENGINEER | | HWY | 1 | 38.150 | 41.150 | 1.5 | 1.5 | 2.0 | 7.250 | 18.23 | 0.000 | 3.000 |
| OPERATING ENGINEER | | HWY | 2 | 35.460 | 41.150 | 1.5 | 1.5 | 2.0 | 7.250 | 18.23 | 0.000 | 3.000 |
| OPERATING ENGINEER | | HWY | 3 | 31.030 | 41.150 | 1.5 | 1.5 | 2.0 | 7.250 | 18.23 | 0.000 | 3.000 |
| PAINTER | | ALL | | 33.650 | 35.650 | 1.5 | 1.5 | 1.5 | 10.30 | 8.200 | 0.000 | 1.350 |
| PAINTER SIGNS | | BLD | | 33.920 | 38.090 | 1.5 | 1.5 | 1.5 | 2.600 | 2.710 | 0.000 | 0.000 |
| PILEDRIVER | | BLD | | 31.880 | 34.130 | 1.5 | 1.5 | 2.0 | 8.000 | 15.71 | 0.000 | 0.520 |
| PILEDRIVER | | HWY | | 33.700 | 35.950 | 1.5 | 1.5 | 2.0 | 8.000 | 15.81 | 0.000 | 0.520 |
| PIPEFITTER | | BLD | | 37.400 | 41.510 | 1.5 | 1.5 | 2.0 | 7.000 | 11.63 | 0.000 | 1.060 |
| PLASTERER | | BLD | | 28.140 | 29.770 | 1.5 | 1.5 | 2.0 | 7.500 | 15.00 | 0.000 | 0.870 |
| PLUMBER | | BLD | | 34.520 | 37.630 | 1.5 | 1.5 | 2.0 | 7.000 | 13.86 | 0.000 | 0.950 |
| ROOFER | | BLD | | 30.580 | 32.110 | 1.5 | 1.5 | 2.0 | 8.450 | 7.220 | 0.000 | 0.250 |
| SHEETMETAL WORKER | | BLD | | 32.430 | 34.050 | 1.5 | 1.5 | 2.0 | 9.120 | 15.55 | 0.000 | 0.780 |
| SIGN HANGER | | HWY | | 35.980 | 37.980 | 0.0 | 0.0 | 0.0 | 9.490 | 13.91 | 0.000 | 0.000 |
| SPRINKLER FITTER | | BLD | | 37.120 | 39.870 | 1.5 | 1.5 | 2.0 | 8.420 | 8.500 | 0.000 | 0.350 |
| STEEL ERECTOR | | HWY | | 35.980 | 37.980 | 0.0 | 0.0 | 0.0 | 9.490 | 13.91 | 0.000 | 0.000 |
| STONE MASON | | BLD | | 32.380 | 33.880 | 1.5 | 1.5 | 2.0 | 8.600 | 9.870 | 0.000 | 0.590 |
| ~~SURVEY WORKER~~ | | ->NOT IN EFFECT | | | NW ALL | | 28.600 | 30.100 | 1.5 | 1.5 | 2.0 | 7.700 | 14.86 | 0.000 | 0.800 |
| ~~SURVEY WORKER~~ | | ->NOT IN EFFECT | | | SE ALL | | 29.060 | 30.560 | 1.5 | 1.5 | 2.0 | 8.000 | 14.06 | 0.000 | 0.800 |

| | | | | | | | | | | | |
|---|---|---|---|---|---|---|---|---|---|---|---|
| TERRAZZO FINISHER | BLD | | 29.890 | 0.000 | 1.5 | 1.5 | 2.0 | 8.600 | 10.05 | 0.000 | 0.580 |
| TERRAZZO MASON | BLD | | 31.650 | 32.900 | 1.5 | 1.5 | 2.0 | 8.600 | 10.05 | 0.000 | 0.580 |
| TILE MASON | BLD | | 31.650 | 32.900 | 1.5 | 1.5 | 2.0 | 8.600 | 10.05 | 0.000 | 0.580 |
| TRUCK DRIVER | ALL | 1 | 33.000 | 36.550 | 1.5 | 1.5 | 2.0 | 11.10 | 5.230 | 0.000 | 0.250 |
| TRUCK DRIVER | ALL | 2 | 33.480 | 36.550 | 1.5 | 1.5 | 2.0 | 11.10 | 5.230 | 0.000 | 0.250 |
| TRUCK DRIVER | ALL | 3 | 33.700 | 36.550 | 1.5 | 1.5 | 2.0 | 11.10 | 5.230 | 0.000 | 0.250 |
| TRUCK DRIVER | ALL | 4 | 34.010 | 36.550 | 1.5 | 1.5 | 2.0 | 11.10 | 5.230 | 0.000 | 0.250 |
| TRUCK DRIVER | ALL | 5 | 34.900 | 36.550 | 1.5 | 1.5 | 2.0 | 11.10 | 5.230 | 0.000 | 0.250 |
| TRUCK DRIVER | O&C | 1 | 27.280 | 30.220 | 1.5 | 1.5 | 2.0 | 11.40 | 5.440 | 0.000 | 0.250 |
| TRUCK DRIVER | O&C | 2 | 27.680 | 30.220 | 1.5 | 1.5 | 2.0 | 11.40 | 5.440 | 0.000 | 0.250 |
| TRUCK DRIVER | O&C | 3 | 27.860 | 30.220 | 1.5 | 1.5 | 2.0 | 11.40 | 5.440 | 0.000 | 0.250 |
| TRUCK DRIVER | O&C | 4 | 28.110 | 30.220 | 1.5 | 1.5 | 2.0 | 11.40 | 5.440 | 0.000 | 0.250 |
| TRUCK DRIVER | O&C | 5 | 28.850 | 30.220 | 1.5 | 1.5 | 2.0 | 11.40 | 5.440 | 0.000 | 0.250 |
| TUCKPOINTER | BLD | | 32.380 | 33.880 | 1.5 | 1.5 | 2.0 | 8.600 | 9.870 | 0.000 | 0.590 |

Legend: RG (Region)
TYP (Trade Type - All,Highway,Building,Floating,Oil & Chip,Rivers)
C (Class)
Base (Base Wage Rate)
FRMAN (Foreman Rate)
M-F>8 (OT required for any hour greater than 8 worked each day, Mon through Fri.
OSA (Overtime (OT) is required for every hour worked on Saturday)
OSH (Overtime is required for every hour worked on Sunday and Holidays)
H/W (Health & Welfare Insurance)
Pensn (Pension)
Vac (Vacation)
Trng (Training)

## Explanations

TAZEWELL COUNTY

ASBESTOS - See Laborers

CARPENTERS (NORTH) - That part of the county North including the towns of Marquette Hts., Morton, Creve Coeur and Deer Creek.

LABORERS (NORTHWEST) - The area bounded by the old city limits of East Peoria.

MILLWRIGHTS - See Carpenters
PILEDRIVERS - See Carpenters

The following list is considered as those days for which holiday rates of wages for work performed apply: New Years Day, Memorial Day, Fourth of July, Labor Day, Thanksgiving Day, Christmas Day and Veterans Day in some classifications/counties. Generally, any of these holidays which fall on a Sunday is celebrated on the following Monday. This then makes work performed on that Monday payable at the appropriate overtime rate for holiday pay. Common practice in a given local may alter certain days of celebration. If in doubt, please check with IDOL.

Oil and chip resealing (O&C) means the application of road oils and liquid asphalt to coat an existing road surface, followed by application of aggregate chips or gravel to coated surface, and subsequent rolling of material to seal the surface.

EXPLANATION OF CLASSES

ASBESTOS - GENERAL - removal of asbestos material/mold and hazardous materials from any place in a building, including mechanical systems where those mechanical systems are to be removed. This includes the removal of asbestos materials/mold and hazardous materials from ductwork or pipes in a building when the building is to be demolished

at the time or at some close future date.

ASBESTOS - MECHANICAL - Removal of asbestos material from mechanical systems, such as pipes, ducts, and boilers, where the mechanical systems are to remain.

CERAMIC TILE FINISHER, MARBLE FINISHER, TERRAZZO FINISHER

Assisting, helping or supporting the tile, marble and terrazzo mechanic by performing their historic and traditional work assignments required to complete the proper installation of the work covered by said crafts. The term "Ceramic" is used for naming the classification only and is in no way a limitation of the product handled. Ceramic takes into consideration most hard tiles.

ELECTRONIC SYSTEMS TECHNICIAN

Installation, service and maintenance of low-voltage systems which utilizes the transmission and/or transference of voice, sound, vision, or digital for commercial, education, security and entertainment purposes for the following: TV monitoring and surveillance, background/foreground music, intercom and telephone interconnect, field programming, inventory control systems, microwave transmission, multi-media, multiplex, radio page, school, intercom and sound burglar alarms and low voltage master clock systems.

Excluded from this classification are energy management systems, life safety systems, supervisory controls and data acquisition systems not intrinsic with the above listed systems, fire alarm systems, nurse call systems and raceways exceeding fifteen feet in length.

SURVEY WORKER - Operated survey equipment including data collectors, G.P.S. and robotic instruments, as well as conventional levels and transits.

TRUCK DRIVER - BUILDING, HEAVY AND HIGHWAY CONSTRUCTION
Class 1. Drivers on 2 axle trucks hauling less than 9 ton. Air compressor and welding machines and brooms, including those pulled by separate units, truck driver helpers, warehouse employees, mechanic helpers, greasers and tiremen, pickup trucks when hauling materials, tools, or workers to and from and on-the-job site, and fork lifts up to 6,000 lb. capacity.

Class 2. Two or three axle trucks hauling more than 9 ton but hauling less than 16 ton. A-frame winch trucks, hydrolift trucks, vactor trucks or similar equipment when used for transportation purposes. Fork lifts over 6,000 lb. capacity, winch trucks, four axle combination units, and ticket writers.

Class 3. Two, three or four axle trucks hauling 16 ton or more. Drivers on water pulls, articulated dump trucks, mechanics and working forepersons, and dispatchers. Five axle or more combination units.

Class 4. Low Boy and Oil Distributors.

Class 5. Drivers who require special protective clothing while employed on hazardous waste work.

TRUCK DRIVER - OIL AND CHIP RESEALING ONLY.

This shall encompass laborers, workers and mechanics who drive contractor or subcontractor owned, leased, or hired pickup, dump, service, or oil distributor trucks. The work includes transporting materials and equipment (including but not limited to, oils, aggregate

supplies, parts, machinery and tools) to or from the job site; distributing oil or liquid asphalt and aggregate; stock piling material when in connection with the actual oil and chip contract. The Truck Driver (Oil & Chip Resealing) wage classification does not include supplier delivered materials.

OPERATING ENGINEERS - BUILDING

Class 1. Cranes; Overhead Cranes; Gradall; All Cherry Pickers; Mechanics; Central Concrete Mixing Plant Operator; Road Pavers (27E - Dual Drum - Tri Batchers); Blacktop Plant Operators and Plant Engineers; 3 Drum Hoist; Derricks; Hydro Cranes; Shovels; Skimmer Scoops; Koehring Scooper; Drag Lines; Backhoe; Derrick Boats; Pile Drivers and Skid Rigs; Clamshells; Locomotive Cranes; Dredge (all types) Motor Patrol; Power Blades - Dumore - Elevating and similar types; Tower Cranes (Crawler-Mobile) and Stationary; Crane-type Backfiller; Drott Yumbo and similar types considered as Cranes; Caisson Rigs; Dozer; Tournadozer; Work Boats; Ross Carrier; Helicopter; Tournapulls - all and similar types; Scoops (all sizes); Pushcats; Endloaders (all types); Asphalt Surfacing Machine; Slip Form Paver; Rock Crusher; Heavy Equipment Greaser; CMI, CMI Belt Placer, Auto Grade & 3 Track and similar types; Side Booms; Multiple Unit Earth Movers; Creter Crane; Trench Machine; Pump-crete-Belt Crete-Squeeze Cretes-Screw-type Pumps and Gypsum; Bulker & Pump - Operator will clean; Formless Finishing Machine; Flaherty Spreader or similar types; Screed Man on Laydown Machine; Wheel Tractors (industrial or Farm-type w/Dozer-Hoe-Endloader or other attachments); F.W.D. & Similar Types; Vermeer Concrete Saw.

Class 2. Dinkeys; Power Launches; PH One-pass Soil Cement Machine (and similar types); Pugmill with Pump; Backfillers; Euclid Loader; Forklifts; Jeeps w/Ditching Machine or other attachments; Tuneluger; Automatic Cement and Gravel Batching Plants; Mobile Drills (Soil Testing) and similar types; Gurries and Similar Types; (1) and (2) Drum Hoists (Buck Hoist and Similar Types); Chicago Boom; Boring Machine & Pipe Jacking Machine; Hydro Boom; Dewatering System; Straw Blower; Hydro Seeder; Assistant Heavy Equipment Greaser on Spread; Tractors (Track type) without Power Unit pulling Rollers; Rollers on Asphalt -- Brick Macadem; Concrete Breakers; Concrete Spreaders; Mule Pulling Rollers; Center Stripper; Cement Finishing Machines & CMI Texture & Reel Curing Machines; Cement Finishing Machine; Barber Green or similar loaders; Vibro Tamper (All similar types) Self-propelled; Winch or Boom Truck; Mechanical Bull Floats; Mixers over 3 Bag to 27E; Tractor pulling Power Blade or Elevating Grader; Porter Rex Rail; Clary Screed; Truck Type Hoptoe Oilers; Fireman; Spray Machine on Paving; Curb Machines; Truck Crane Oilers; Oil Distributor; Truck-Mounted Saws.

Class 3. Air Compressor; Power Subgrader; Straight Tractor; Trac Air without attachments; Herman Nelson Heater, Dravo, Warner, Silent Glo, and similar types; Roller: Five (5) Ton and under on Earth or Gravel; Form Grader; Crawler Crane & Skid Rig Oilers; Freight Elevators - permanently installed; Pump; Light Plant; Generator; Conveyor (1) or (2) - Operator will clean; Welding Machine; Mixer (3) Bag and Under (Standard Capacity with skip); Bulk Cement Plant; Oiler on Central Concrete Mixing Plant.

OPERATING ENGINEERS - HEAVY AND HIGHWAY CONSTRUCTION

CLASS 1. Cranes; Hydro Cranes; Shovels; Crane Type Backfiller; Tower, Mobile, Crawler, & Stationary Cranes; Derricks; Hoists (3 Drum); Draglines; Drott Yumbo & Similar Types considered as Cranes; 360 Degree Swing Excavator (Shears, Grapples, Movacs, etc.); Back Hoe; Derrick Boats; Pile Driver and Skid Rigs; Clam Shell; Locomotive -

Cranes; Road Pavers - Single Drum - Dual Drum - Tri Batcher; Motor Patrols & Power Blades - Dumore - Elevating & Similar Types; Mechanics; Central Concrete Mixing Plant Operator; Asphalt Batch Plant Operators and Plant Engineers; Gradall; Caisson Rigs; Skimmer Scoop - Koering Scooper; Dredges (all types); Hoptoe; All Cherry Pickers; Work Boat; Ross Carrier; Helicopter; Dozer; Tournadozer; Tournapulls - all and similar types; Operation of Concrete and all Recycle Machines; Multiple Unit Earth Movers; Scoops (all sizes); Pushcats; Endloaders (all types); Asphalt Surfacing Machine; Slip Form Paver; Rock Crusher; Operation of Material Crusher, Screening Plants, and Tunnel Boring Machine; Heavy Equipment Greaser (top greaser on spread); CMI, Auto Grade, CMI Belt Placer & 3 Track and Similar Types; Side Booms; Asphalt Heater & Planer Combination (used to plane streets); Wheel Tractors (with Dozer, Hoe or Endloader Attachments); CAT Earthwork Compactors and Similar Types; Blaw Knox Spreader and Similar Types; Trench Machines; Pump Crete - Belt Crete - Squeeze Crete - Screw Type Pumps and Gypsum (operator will clean); Creter Crane; Operation of Concrete Pump Truck; Formless Finishing Machines; Flaherty Spreader or Similar Types; Screed Man on Laydown Machine; Vermeer Concrete Saw; Operation of Laser Screed; Span Saw; Dredge Leverman; Dredge Engineer; Lull or Similar Type; Hydro-Boom Truck; Operation of Guard Rail Machine; and Starting Engineer on Pipeline or Construction (11 or more pieces) including: Air Compressor (Trailer Mounted), All Forced Air Heaters (regardless of Size), Water Pumps (Greater than 4-1/2" or Total Discharge Over 4-1/2"), Light Plants, Generators (Trailer Mounted - Excluding Decontamination Trailer), Welding Machines (Any Size or Mode of Power), Conveyor, Mixer (any size), Stud Welder, Power Pac, etc, and Ground Heater (Trailer Mounted).

CLASS 2. Bulker & Pump; Power Launches; Boring Machine & Pipe Jacking Machine; Dinkeys; Operation of Carts, Powered Haul Unit for a Boring Machine; P & H One Pass Soil Cement Machines and Similar Types; Wheel Tractors (Industry or Farm Type - Other); Back Fillers; Euclid Loader; Fork Lifts; Jeep w/Ditching Machine or Other Attachments; Tunneluger; Automatic Cement & Gravel Batching Plants; Mobile Drills - Soil Testing and Similar Types; Pugmill with Pump; All (1) and (2) Drum Hoists; Dewatering System; Straw Blower; Hydro-Seeder; Bump Grinders (self-propelled); Assistant Heavy Equipment Greaser; Apsco Spreader; Tractors (Track-Type) without Power Units Pulling Rollers; Rollers on Asphalt - Brick or Macadam; Concrete Breakers; Concrete Spreaders; Cement Strippers; Cement Finishing Machines & CMI Texture & Reel Curing Machines; Vibro-Tampers (All Similar Types Self-Propelled); Mechanical Bull Floats; Self-Propelled Concrete Saws; Truck Mounted Power Saws; Operation of Curb Cutters; Mixers - Over Three (3) Bags; Winch and Boom Trucks; Tractor Pulling Power Blade or Elevating Grader; Porter Rex Rail; Clary Screed; Mule Pulling Rollers; Pugmill without Pump; Barber Greene or Similar Loaders; Track Type Tractor w/Power Unit attached (minimum); Fireman; Spray Machine on Paving; Curb Machines; Paved Ditch Machine; Power Broom; Self-Propelled Sweepers; Self-Propelled Conveyors; Power Subgrader; Oil Distributor; Straight Tractor; Truck Crane Oiler; Truck Type Oilers; Directional Boring Machine; Horizontal Directional Drill; Articulating End Dump Vehicles; Starting Engineer on Pipeline or Construction (6 -10 pieces) including: Air Compressor (Trailer Mounted), All Forced Air Heaters (regardless of Size), Water Pumps (Greater than 4-1/2" or Total Discharge Over 4-1/2"), Light Plants, Generators (Trailer Mounted - Excluding Decontamination Trailer), Welding Machines (Any Size or Mode of Power), Conveyor, Mixer (any size), Stud Welder, Power Pac, etc., and Ground Heater (Trailer Mounted).

CLASS 3. Straight Framed Truck Mounted Vac Unit (separately powered); Trac Air Machine (without attachments); Rollers - Five Ton and Under on Earth and Gravel; Form Graders; Bulk Cement Plant; Oilers; and

Starting Engineer on Pipeline or Construction (3 - 5 pieces) including: Air Compressor (Trailer Mounted), All Forced Air Heaters (regardless of Size), Water Pumps (Greater than 4-1/2" or Total Discharge Over 4-1/2"), Light Plants, Generators (Trailer Mounted - Excluding Decontamination Trailer), Welding Machines (Any Size or Mode of Power), Conveyor, Mixer (any size), Stud Welder, Power Pac, etc., and Ground Heater (Trailer Mounted).

Other Classifications of Work:

For definitions of classifications not otherwise set out, the Department generally has on file such definitions which are available. If a task to be performed is not subject to one of the classifications of pay set out, the Department will upon being contacted state which neighboring county has such a classification and provide such rate, such rate being deemed to exist by reference in this document. If no neighboring county rate applies to the task, the Department shall undertake a special determination, such special determination being then deemed to have existed under this determination. If a project requires these, or any classification not listed, please contact IDOL at 217-782-1710 for wage rates or clarifications.

LANDSCAPING

Landscaping work falls under the existing classifications for laborer, operating engineer and truck driver. The work performed by landscape plantsman and landscape laborer is covered by the existing classification of laborer. The work performed by landscape operators (regardless of equipment used or its size) is covered by the classifications of operating engineer. The work performed by landscape truck drivers (regardless of size of truck driven) is covered by the classifications of truck driver.